SECTION HAC

HEATER & AIR CONDITIONING CONTROL SYSTEM

CONTENTS

BASIC INSPECTION

DIAGNOSIS AND REPAIR WORKFLOW

Work Flow

INFOID:0000000003894064

DETAILED FLOW

1. LISTEN TO CUSTOMER COMPLAINT

Listen to customer complaint. (Get detailed information about the conditions and environment when the symptom occurs.)

>> GO TO 2.

2. VERIFY THE SYMPTOM WITH OPERATIONAL CHECK

Verify the symptom with operational check. Refer to HAC-5, "WITHOUT ACCS : Description & Inspection" (WITHOUT ACCS) or HAC-8, "WITH ACCS : Description & Inspection" (WITH ACCS).

>> GO TO 3.

3. GO TO APPROPRIATE TROUBLE DIAGNOSIS

Go to appropriate trouble diagnosis (Refer to HAC-153, "Diagnosis Chart By Symptom" below).

>> GO TO 4.

4. REPAIR OR REPLACE

Repair or replace the specific parts.

>> GO TO 5.

5. FINAL CHECK

Final check.

Is the inspection result normal?

YES >> INSPECTION END
NO >> GO TO 3.

INSPECTION AND ADJUSTMENT
WITHOUT ACCS

WITHOUT ACCS : Description & Inspection

INFOID:0000000003901785

DESCRIPTION

The purpose of the operational check is to check that the individual system operates normally.

Conditions : Engine running at normal operating temperature

INSPECTION PROCEDURE

1. CHECK MEMORY FUNCTION

1. Start the engine.
2. Turn temperature control dial (driver side) clockwise until 32.0°C (90°F) is displayed.
3. Press the OFF switch.
4. Turn the ignition switch OFF.
5. Turn the ignition switch ON.
6. Press the AUTO switch.
7. Check that the temperature setting before turning the ignition switch OFF is stored.

Is the inspection result normal?

YES >> GO TO 2.
NO >> Memory function malfunction: HAC-161, "Inspection procedure".

2. CHECK BLOWER MOTOR SPEED

1. Start the engine.
2. Press fan (UP: +) switch. Check that the fan speed changes. Check the operation for all fan speeds.
3. Set the fan speed to max speed.

Is the inspection result normal?

YES >> GO TO 3.
NO >> Blower motor system malfunction: HAC-81, "Diagnosis Procedure".

3. CHECK DISCHARGE AIR

1. Press the MODE switch and the DEF switch.
2. Each position indicator should change shape.
3. Confirm that discharge air comes out according to the air distribution table as follows:

Discharge air flow						
Mode position indication	Condition	Air outlet/distribution				
		VENT		FOOT		DEF
		Front	Rear	Front	Rear	
	DUAL switch: OFF Rear ventilator : OPEN	89%	11%	—	—	—
		45%	11%	26%	18%	—
		13%	11%	32%	19%	25%
		10%	10%	28%	17%	35%
		17%	—	—	—	83%

JSIIA1208GB

NOTE:
Confirm that the compressor clutch is engaged (sound or visual inspection) and the intake door position is at FRE when D/F or DEF is selected.

Is the inspection result normal?

YES >> GO TO 4.
NO >> Mode door system malfunction: HAC-71, "Diagnosis Procedure".

4. CHECK INTAKE AIR

1. Press intake switch. REC indicator turns ON.
2. Press intake switch again. FRE indicator turns ON.
3. Listen for intake door position change. (Slight change of blower sound can be heard.)

NOTE:
Confirm that the compressor clutch is engaged (sound or visual inspection) and the intake door position is at FRE when D/F or DEF is selected.

Is the inspection result normal?

YES >> GO TO 5.
NO >> Intake door system malfunction: HAC-77, "WITHOUT ACCS : Diagnosis Procedure".

5. CHECK A/C SWITCH

1. Press the A/C switch.
2. A/C switch indicator turns ON.
   Confirm that the compressor clutch engages (sound or visual inspection).

Is the inspection result normal?

YES >> GO TO 6.
NO >> Magnet clutch system malfunction: HAC-85, "Diagnosis Procedure".

6. CHECK WITH TEMPERATURE SETTING LOWERED

1. Turn temperature control dial (driver side) counterclockwise until 18.0°C (60°F) is displayed.
2. Check that the cool air blows from the outlets.

Is the inspection result normal?

YES >> GO TO 7.
NO >> Insufficient cooling: HAC-154, "Inspection procedure".

7. CHECK WITH TEMPERATURE SETTING RAISED

1. Turn temperature control dial (driver side) clockwise until 32.0°C (90°F) is displayed.
2. Check that the warm air blows from the outlets.

Is the inspection result normal?

YES >> GO TO 8.
NO >> Insufficient heating: HAC-156, "Inspection procedure".

8. CHECK LEFT AND RIGHT VENTILATION TEMPERATURE SEPARATELY CONTROL SYSTEM FUNCTION

1. Press the DUAL switch, and then check that “DUAL” is shown on the display.
2. Operate temperature control dial (driver side). Check that the discharge air temperature (driver side) changes.
3. Operate the temperature control dial (passenger side). Check that the discharge air temperature (passenger side) changes.
4. Press the DUAL switch, and then check that the temperature setting (LH/RH) is unified to the driver side temperature setting.

Is the inspection result normal?

YES >> GO TO 9.
NO >> Refer to HAC-153, "Diagnosis Chart By Symptom" and perform the appropriate diagnosis.

9. CHECK AUTO MODE

1. Press the AUTO switch, and then check that “AUTO” is shown on the display.
2. Check that the discharge air and blower speed depend on ambient temperature, in-vehicle temperature and temperature setting.

Is the inspection result normal?

YES >> INSPECTION END
NO >> Refer to HAC-153, "Diagnosis Chart By Symptom" and perform the appropriate diagnosis.

WITHOUT ACCS : Temperature Setting Trimmer

INFOID:0000000003894070

DESCRIPTION

The trimmer compensates for differences in range of ±3°C (±6°F) between temperature setting (displayed digitally) and temperature felt by customer.

Operating procedures for this trimmer are as per the following:

1. Begin self-diagnosis STEP-5 mode. Refer to HAC-56, "WITHOUT ACCS : Diagnosis Description".
2. Press fan (UP: +) switch to set system in auxiliary mode.
3. Display shows “61” in auxiliary mechanism. It takes approximately 3 seconds to enable setting operation.
4. Turn temperature control dial (driver side) as desired. Temperature will change at a rate of 0.5°C (1.0°F) each time a dial is turned.

   CAUTION:

   A decimal point is not indicated on the display.

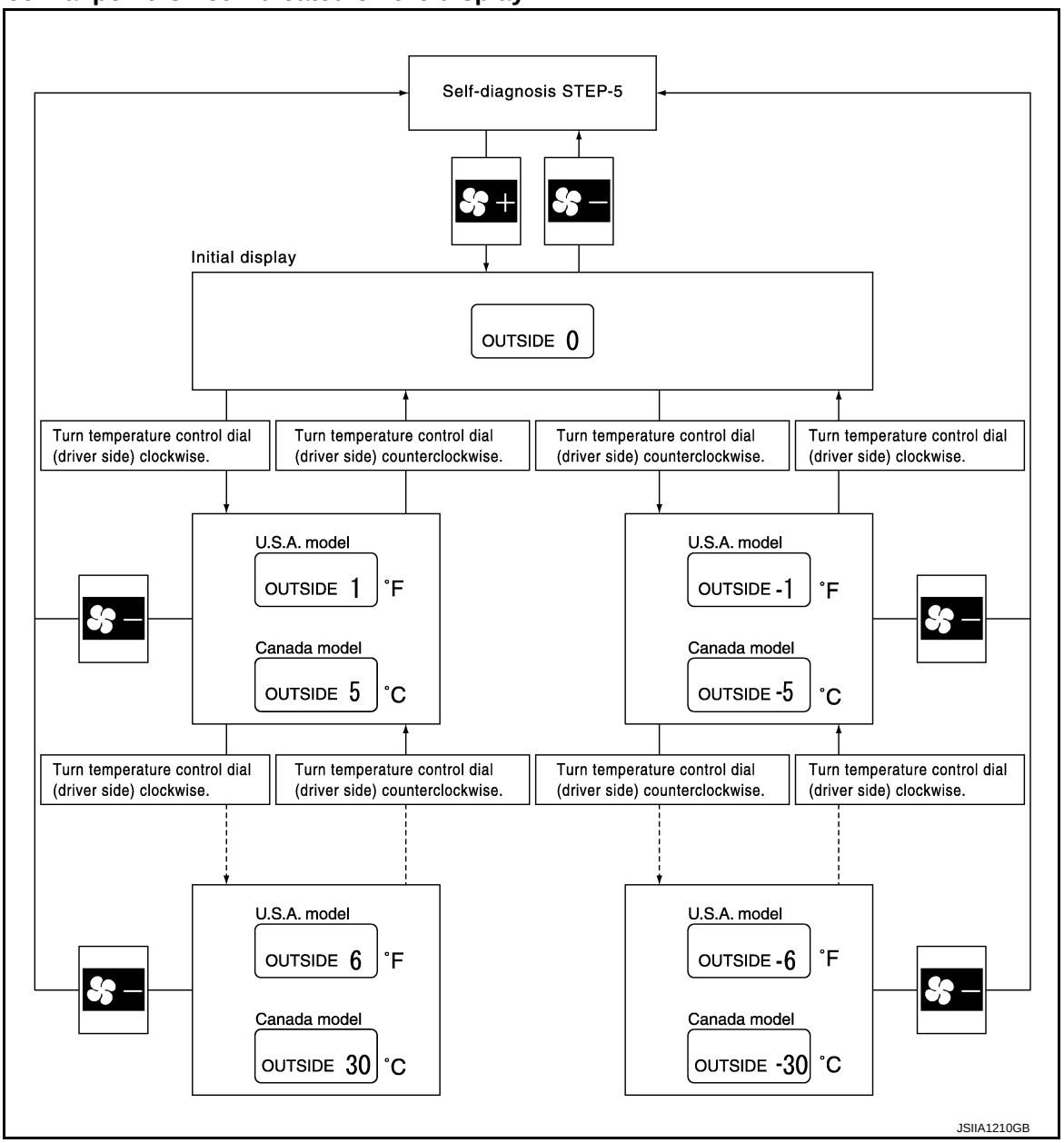

NOTE:

When battery cable is disconnected or battery voltage is below 10 V, trimmer operation is canceled. Temperature set becomes that of initial condition, i.e. 0°C (0°F).

WITHOUT ACCS : Foot Position Setting Trimmer

INFOID:0000000003894071

DESCRIPTION

Wind distribution ratio in FOOT mode can be set.

Operating procedures for this trimmer are as per the following:

1. Begin self-diagnosis STEP-5 mode. Refer to HAC-56, "WITHOUT ACCS : Diagnosis Description".
2. Press fan (UP: +) switch to set system in auxiliary mode.
3. Press mode switch as desired.

Display	Discharge air flow									
	Automatically controls the mode door					Manually controls the mode door				
	VENT		FOOT		DEF	VENT		FOOT		DEF
	Front	Rear	Front	Rear		Front	Rear	Front	Rear	
(Initial setting)	13%	11%	32%	19%	25%	13%	11%	32%	19%	25%
	13%	11%	32%	19%	25%	17%	15%	43%	25%	–
	17%	15%	43%	25%	–	13%	11%	32%	19%	25%
	17%	15%	43%	25%	–	17%	15%	43%	25%	–

JSIIA1209GB

NOTE:
When battery cable is disconnected or battery voltage is below 10 V, trimmer operation is canceled. Air distribution ratio set becomes that of initial condition.

WITHOUT ACCS : Inlet Port Memory Function

INFOID:0000000003894072

DESCRIPTION

When ignition switch is turned from OFF to ON, inlet port can be set to AUTO or manual.

Operating procedures for this trimmer are as per the following:
1. Begin self-diagnosis STEP-5 mode. Refer to HAC-56, "WITHOUT ACCS : Diagnosis Description".
2. Press fan (UP: +) switch to set system in auxiliary mode.
3. Press intake switch as desired.

FRE indicator	REC indicator	Setting status		Setting changeover method
		FRE	REC	
OFF	ON	AUTO control (Initial setting)	Manual REC status is memorized. (Initial setting)	Intake switch: ON
ON	ON	Manual FRE status is memorized.	Manual REC status is memorized.	
ON	OFF	Manual FRE status is memorized.	AUTO control	
OFF	OFF	AUTO control	AUTO control	

NOTE:
When battery cable is disconnected or battery voltage is below 10 V, memory function is canceled. Memory function set becomes that of initial condition.

WITH ACCS

WITH ACCS : Description & Inspection

INFOID:0000000003941423

DESCRIPTION

The purpose of the operational check is to check that the individual system operates normally.

Conditions : Engine running at normal operating temperature

INSPECTION PROCEDURE

1. CHECK MEMORY FUNCTION

1. Start the engine.

2. Turn temperature control dial (driver side) clockwise until 32.0°C (90°F) is displayed.
3. Press the OFF switch.
4. Turn the ignition switch OFF.
5. Turn the ignition switch ON.
6. Press the AUTO switch.
7. Check that the temperature setting before turning the ignition switch OFF is stored.

Is the inspection result normal?

YES >> GO TO 2.
NO >> Memory function malfunction: HAC-161, "Inspection procedure".

2. CHECK BLOWER MOTOR SPEED

1. Start the engine.
2. Press fan (UP: +) switch. Check that the fan speed changes. Check the operation for all fan speeds.
3. Set the fan speed to max speed.

Is the inspection result normal?

YES >> GO TO 3.
NO >> Blower motor system malfunction: HAC-81, "Diagnosis Procedure".

3. CHECK DISCHARGE AIR

1. Press the MODE switch and the DEF switch.
2. Each position indicator should change shape.
3. Confirm that discharge air comes out according to the air distribution table as follows:

Discharge air flow						
Mode position indication	Condition	Air outlet/distribution				
		VENT		FOOT		DEF
		Front	Rear	Front	Rear	
	DUAL switch: OFF Rear ventilator : OPEN	89%	11%	—	—	—
		45%	11%	26%	18%	—
		13%	11%	32%	19%	25%
		10%	10%	28%	17%	35%
		17%	—	—	—	83%

JSIIA1208GB

NOTE:
Confirm that the compressor clutch is engaged (sound or visual inspection) and the intake door position is at FRE when D/F or DEF is selected.

Is the inspection result normal?

YES >> GO TO 4.
NO >> Mode door system malfunction: HAC-71, "Diagnosis Procedure".

4. CHECK INTAKE AIR

1. Press AUTO switch. AUTO INTAKE indicator and REC indicator turns ON (auto intake mode).
2. Press intake switch. AUTO INTAKE indicator and REC indicator turns OFF (fixed FRE mode).
3. Press intake switch again. REC indicator turns ON (fixed REC mode).
4. Press intake switch again. AUTO INTAKE indicator and REC indicator turns ON (auto intake mode).
5. Listen for intake door position change. (Slight change of blower sound can be heard.)

NOTE:
Confirm that the compressor clutch is engaged (sound or visual inspection) and the intake door position is at FRE when D/F or DEF is selected.

Is the inspection result normal?

YES >> GO TO 5.
NO >> Intake door system malfunction: HAC-79, "WITH ACCS : Diagnosis Procedure".

5. CHECK A/C SWITCH

1. Press the A/C switch.
2. A/C switch indicator turns ON.
   Confirm that the compressor clutch engages (sound or visual inspection).

Is the inspection result normal?

YES >> GO TO 6.
NO >> Magnet clutch system malfunction: HAC-85, "Diagnosis Procedure".

6. CHECK WITH TEMPERATURE SETTING LOWERED

1. Turn temperature control dial (driver side) counterclockwise until 18.0°C (60°F) is displayed.
2. Check that the cool air blows from the outlets.

Is the inspection result normal?

YES >> GO TO 7.
NO >> Insufficient cooling: HAC-154, "Inspection procedure".

7. CHECK WITH TEMPERATURE SETTING RAISED

1. Turn temperature control dial (driver side) clockwise until 32.0°C (90°F) is displayed.
2. Check that the warm air blows from the outlets.

Is the inspection result normal?

YES >> GO TO 8.
NO >> Insufficient heating: HAC-156, "Inspection procedure".

8. CHECK LEFT AND RIGHT VENTILATION TEMPERATURE SEPARATELY CONTROL SYSTEM FUNCTION

1. Press the DUAL switch, and then check that “DUAL” is shown on the display.
2. Operate temperature control dial (driver side). Check that the discharge air temperature (driver side) changes.
3. Operate the temperature control dial (passenger side). Check that the discharge air temperature (passenger side) changes.
4. Press the DUAL switch, and then check that the temperature setting (LH/RH) is unified to the driver side temperature setting.

Is the inspection result normal?

YES >> GO TO 9.
NO >> Refer to HAC-153, "Diagnosis Chart By Symptom" and perform the appropriate diagnosis.

9. CHECK AUTO MODE

1. Press the AUTO switch, and then check that “AUTO” is shown on the display.
2. Check that the discharge air and blower speed depend on ambient temperature, in-vehicle temperature and temperature setting.

Is the inspection result normal?

YES >> GO TO 10.
NO >> Refer to HAC-153, "Diagnosis Chart By Symptom" and perform the appropriate diagnosis.

10. CHECK PLASMACLUSTER ION CONTROL FUNCTION

1. Turn ignition switch OFF and restart the engine.
2. Ion indicator (blue) is shown on the display.
3. Press OFF switch.
4. Ion indicator is turned OFF.

Is the inspection result normal?

YES >> GO TO 11.
NO >> Refer to HAC-162, "Inspection procedure".

11. CHECK ION CONTROL MODE

1. Turn ignition switch OFF and restart the engine.
2. Press AUTO switch. AUTO INTAKE indicator turns ON (auto intake mode).
3. Ion indicator (blue) is shown on the display.
4. Ion indicator (blue) changes to ion indicator (green) after approximately 30 minutes.
5. Ion indicator (green) changes to ion indicator (blue) after approximately 15 minutes.
6. Press intake switch. AUTO INTAKE indicator and REC indicator turns OFF (fixed FRE mode).

7. Ion indicator (green) changes to ion indicator (blue) after approximately 15 minutes.
8. Ion indicator (blue) changes to ion indicator (green) after approximately 15 minutes.

Is the inspection result normal?

YES >> INSPECTION END
NO >> Replace unified meter and A/C amp.

WITH ACCS : Temperature Setting Trimmer

INFOID:0000000003941425

DESCRIPTION

The trimmer compensates for differences in range of ±3°C (±6°F) between temperature setting (displayed digitally) and temperature felt by customer.

Operating procedures for this trimmer are as per the following:

1. Begin self-diagnosis STEP-5 mode. Refer to HAC-62, "WITH ACCS : Diagnosis Description".
2. Press fan (UP: +) switch to set system in auxiliary mode.
3. Display shows “61” in auxiliary mechanism. It takes approximately 3 seconds to enable setting operation.
4. Turn temperature control dial (driver side) as desired. Temperature will change at a rate of 0.5°C (1.0°F) each time a dial is turned.

   CAUTION:
   A decimal point is not indicated on the display.

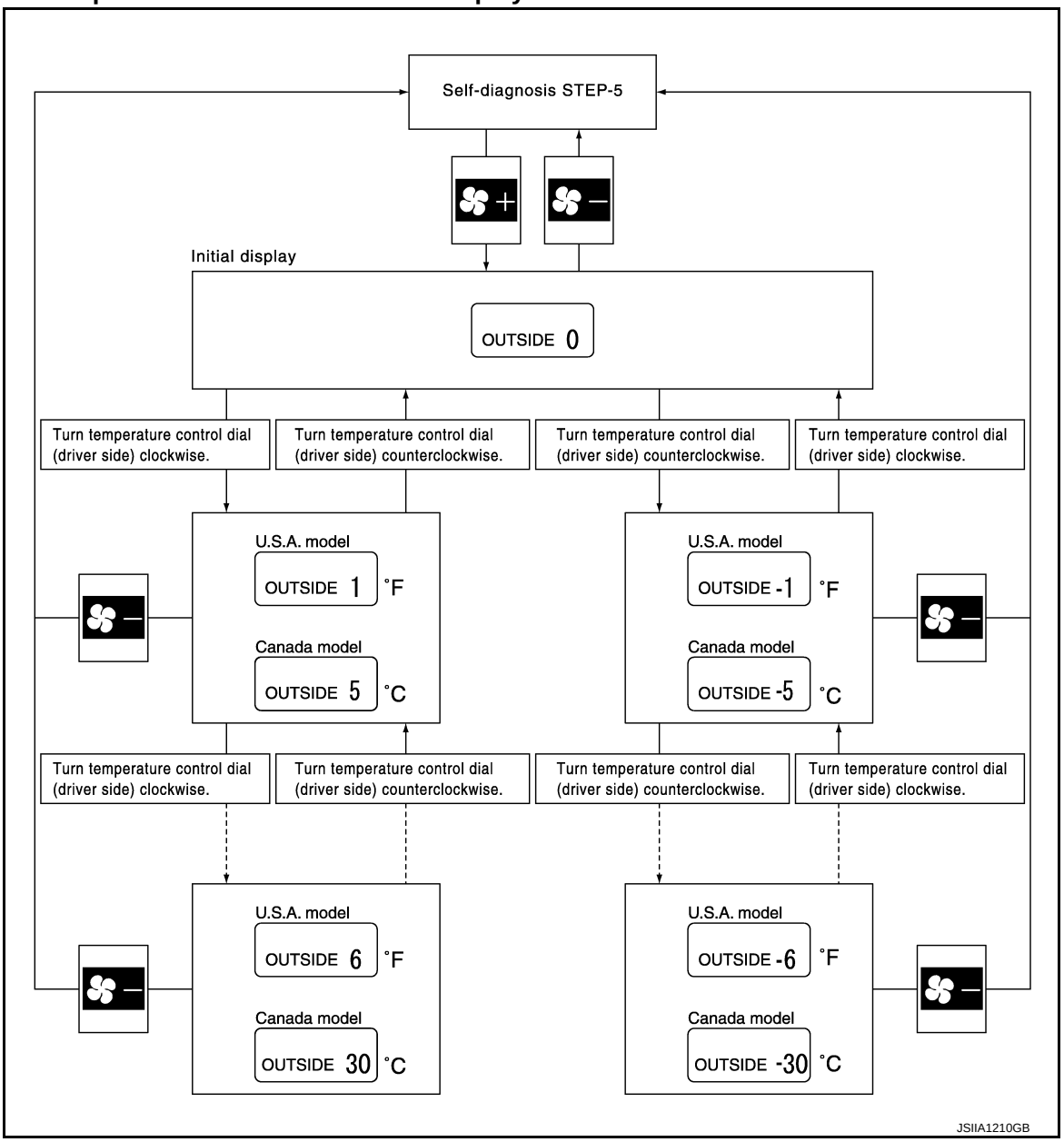

NOTE:
When battery cable is disconnected or battery voltage is below 10 V, trimmer operation is canceled. Temperature set becomes that of initial condition, i.e. 0°C (0°F).

WITH ACCS : Foot Position Setting Trimmer

INFOID:0000000003941427

DESCRIPTION

Wind distribution ratio in FOOT mode can be set.

Operating procedures for this trimmer are as per the following:
1. Begin self-diagnosis STEP-5 mode. Refer to HAC-62, "WITH ACCS : Diagnosis Description".
2. Press fan (UP: +) switch to set system in auxiliary mode.
3. Press mode switch as desired.

Display	Discharge air flow									
	Automatically controls the mode door					Manually controls the mode door				
	VENT		FOOT		DEF	VENT		FOOT		DEF
	Front	Rear	Front	Rear		Front	Rear	Front	Rear	
(Initial setting)	13%	11%	32%	19%	25%	13%	11%	32%	19%	25%
	13%	11%	32%	19%	25%	17%	15%	43%	25%	–
	17%	15%	43%	25%	–	13%	11%	32%	19%	25%
	17%	15%	43%	25%	–	17%	15%	43%	25%	–

JSIIA1209GB

NOTE:
When battery cable is disconnected or battery voltage is below 10 V, trimmer operation is canceled. Air distribution ratio set becomes that of initial condition.

WITH ACCS : Inlet Port Memory Function

INFOID:0000000003941428

DESCRIPTION

When ignition switch is turned from OFF to ON, inlet port can be set to AUTO or manual.

Operating procedures for this trimmer are as per the following:
1. Begin self-diagnosis STEP-5 mode. Refer to HAC-62, "WITH ACCS : Diagnosis Description".
2. Press fan (UP: +) switch to set system in auxiliary mode.
3. Press intake switch as desired.

AUTO INTAKE indicator	REC indicator	Setting status		Setting changeover method
		FRE	REC	
OFF	ON	AUTO control (Initial setting)	Manual REC status is memorized. (Initial setting)	Intake switch: ON
ON	ON	Manual FRE status is memorized.	Manual REC status is memorized.	
ON	OFF	Manual FRE status is memorized.	AUTO control	
OFF	OFF	AUTO control	AUTO control	

NOTE:
When battery cable is disconnected or battery voltage is below 10 V, memory function is canceled. Memory function set becomes that of initial condition.

WITH ACCS : Gas Sensor Sensitivity Adjustment Function

INFOID:0000000003941429

DESCRIPTION

According to customer's sense of smell, gas sensor sensitivity can be changed.

Operating procedures for this trimmer are as follows:
1. Begin self-diagnosis STEP-5 mode. Refer to HAC-62, "WITH ACCS : Diagnosis Description".
2. Press fan (UP: +) switch two times to set system in auxiliary mode.
3. Turn temperature control dial (driver side) as desired for the setting.

Display	Setting
71	More sensitive setting than display 72 setting (the change to REC is earlier than display 72 operation.)
72	More sensitive setting than normal setting (the change to REC is earlier than normal operation.)
73 (Initial status)	Normal
74	Less sensitive setting than normal setting (the change to REC is later than normal operation.)
75	Less sensitive setting than display 74 setting (the change to REC is later than display 74 operation.)

NOTE:
When battery cable is disconnected or battery voltage is below 10 V, Gas sensor sensitivity adjustment function is canceled. Gas sensor sensitivity adjustment function set becomes that of initial condition.

WITH ACCS : Auto Intake Interlocking Movement Change Function

INFOID:0000000003941430

DESCRIPTION

Conditions for interlocking movement of intake switch (auto intake mode) and A/C switch can be changed. In addition, operation of the intake switch, which activates the automatic recirculation control system, can be set to become available when the A/C switch is ON.

Operating procedures for this trimmer are as follows:
1. Begin self-diagnosis STEP-5 mode. Refer to HAC-62, "WITH ACCS : Diagnosis Description".
2. Press fan (UP: +) switch three times to set system in auxiliary mode.
3. Press A/C switch and intake switch as desired.

A/C indicator	AUTO INTAKE indicator	Setting status
ON	ON	A/C switch indicator turns ON automatically when auto intake mode is selected with Intake switch. Auto intake mode continues after A/C switch turns OFF.
OFF	ON	A/C switch indicator stays OFF when auto intake mode is selected with Intake switch. Auto intake mode continues after A/C switch turns OFF.
ON	OFF	A/C switch indicator turns ON automatically when auto intake mode is selected with Intake switch. When A/C switch turns OFF, auto intake mode turns OFF automatically. (Initial setting)
OFF	OFF	Auto intake mode can be set only when A/C switch is ON. When A/C switch turns OFF, auto intake mode turns OFF automatically.

NOTE:
When battery cable is disconnected or battery voltage is below 10 V, auto intake interlocking movement change function is canceled. Auto intake interlocking movement change function set becomes that of initial condition.

SYSTEM DESCRIPTION

COMPRESSOR CONTROL FUNCTION
WITHOUT ACCS

WITHOUT ACCS : Description

INFOID:0000000003894077

PRINCIPLE OF OPERATION

Compressor is not activated.

Functional circuit diagram

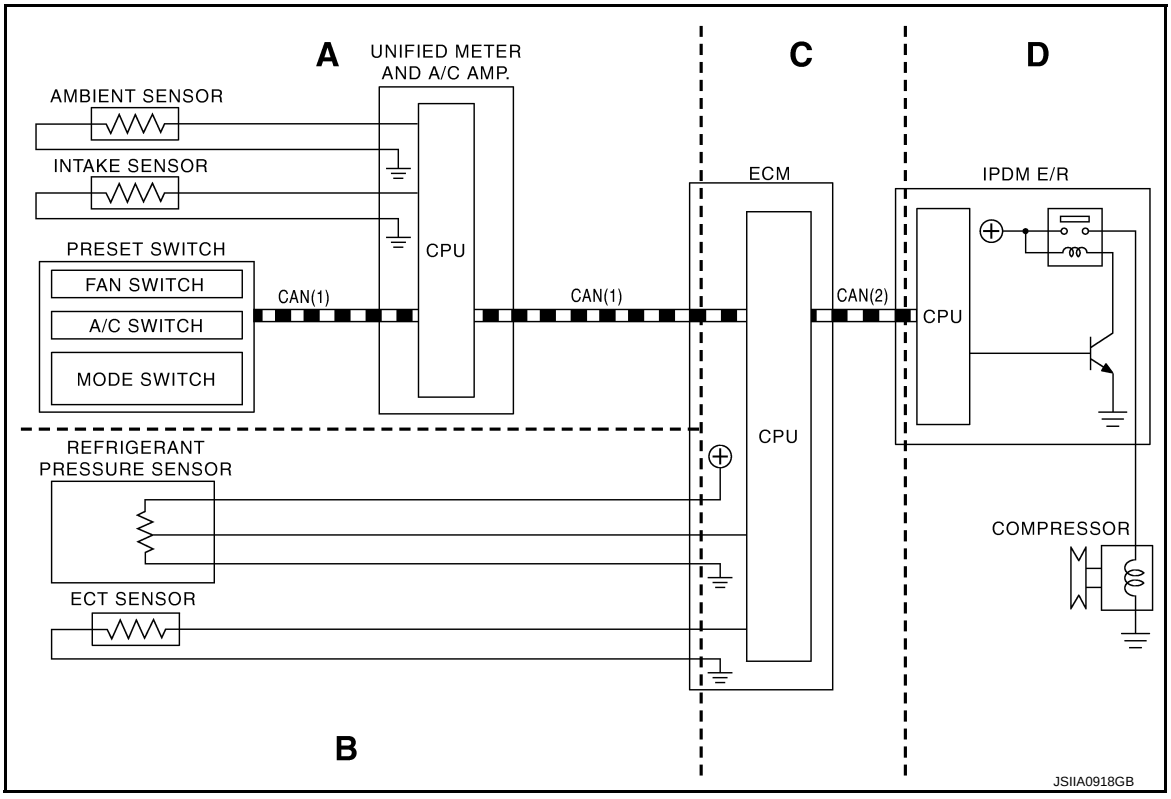

CAN(1) : A/C switch signal
: Blower fan motor switch signal

CAN(2) : A/C compressor request signal

Functional initial inspection chart

Control unit	Diagnosis Item		Location			
			A	B	C	D
Unified meter and A/C amp.	Self-diagnosis function		×	–	–	–
ECM	"ENGINE"	Self-diagnosis (CAN system diagnosis)	–	–	×	–
		Data monitor	×	×	×	–
IPDM E/R	"IPDM E/R"	Self-diagnosis (CAN system diagnosis)	–	–	–	×
		Data monitor	–	–	×	–
	Auto active test		–	–	–	×

WITHOUT ACCS : Fail-safe

INFOID:0000000003894078

FAIL-SAFE FUNCTION

- If a communication error exists between the unified meter and A/C amp., and the AV control unit and preset switch for 30 seconds or longer, air conditioner is controlled under the following conditions:

Compressor	**: ON**
Air outlet	**: AUTO**
Air inlet	**: FRE (Fresh)**
Blower fan speed	**: AUTO**
Set temperature	**: Setting before communication error occurs**

WITHOUT ACCS : Component Part Location

INFOID:0000000003894079

ENGINE COMPARTMENT

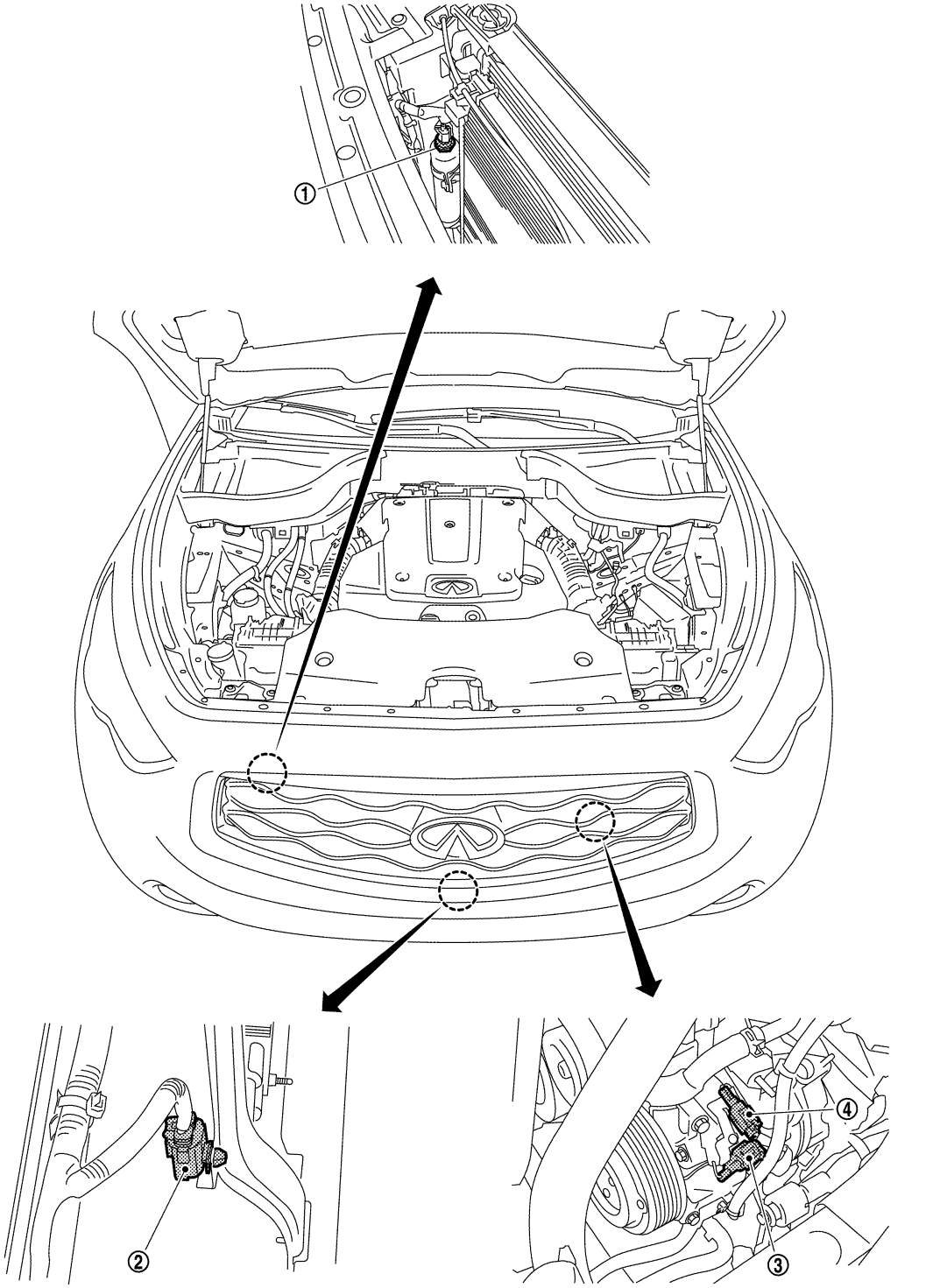

1. Refrigerant pressure sensor
2. Ambient sensor
3. Compressor (magnet clutch)
4. Compressor (ECV)

PASSENGER COMPARTMENT

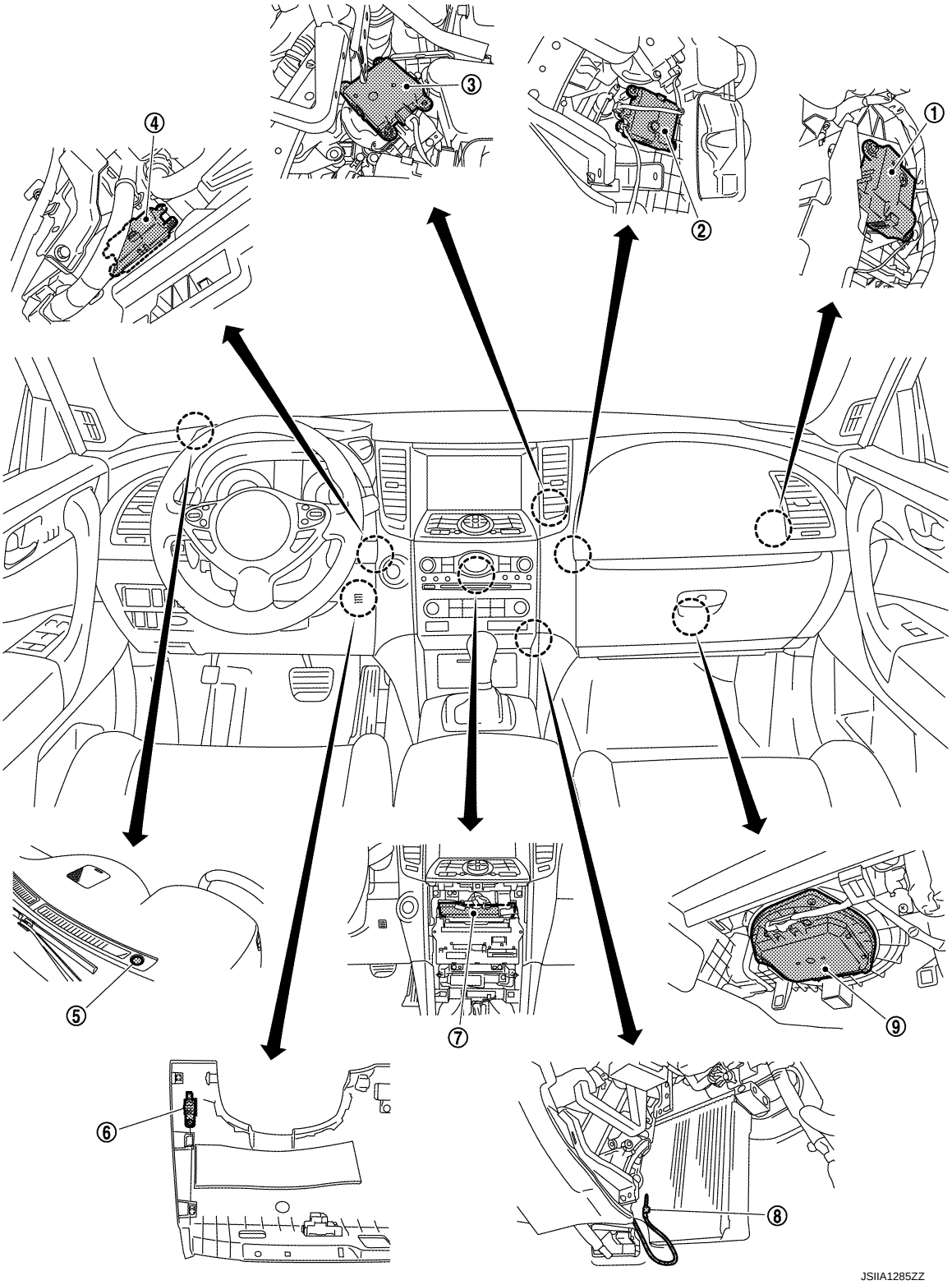

1. Intake door motor
2. Air mix door motor (passenger side)
3. Mode door motor
4. Air mix door motor (driver side)
5. Sunload sensor
6. In-vehicle sensor
7. Unified meter and A/C amp.
8. Intake sensor
9. Blower motor

WITHOUT ACCS : Component's role

INFOID:0000000003894080

Component	Reference
Air mix door motor (driver side)	HAC-73, "Description"
Air mix door motor (passenger side)	HAC-75, "Description"
Ambient sensor	HAC-89, "Description"
Blower motor	HAC-81, "Description"
Compressor	HAC-85, "Description"
Intake door motor	HAC-77, "WITHOUT ACCS : Description"
Intake sensor	HAC-98, "Description"
In-vehicle sensor	HAC-92, "Description"
Mode door motor	HAC-71, "Description"
Refrigerant pressure sensor	EC-496, "Description"
Sunload sensor	HAC-95, "Description"
Unified meter and A/C amp.	HAC-70, "Description"

WITH ACCS

WITH ACCS : Description

INFOID:0000000003941431

PRINCIPLE OF OPERATION

Compressor is not activated.

Functional circuit diagram

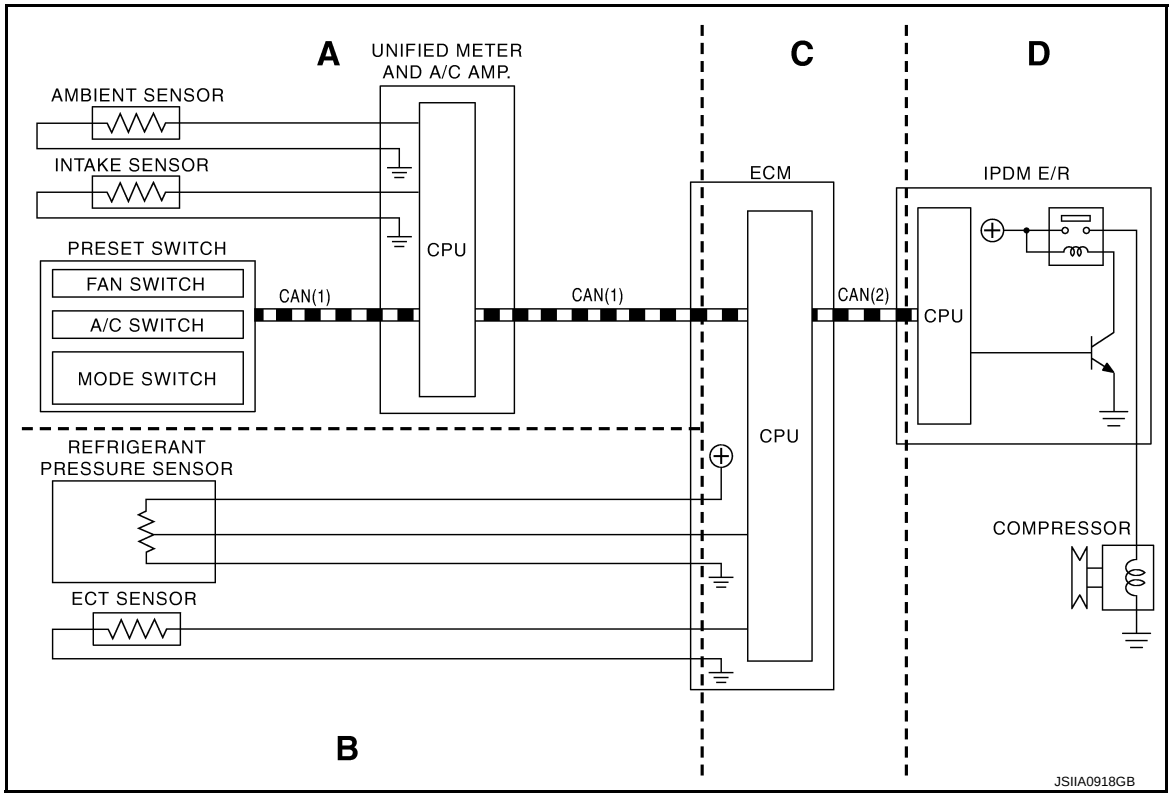

CAN(1) : A/C switch signal
: Blower fan motor switch signal

CAN(2) : A/C compressor request signal

Functional initial inspection chart

Control unit	Diagnosis Item		Location			
			A	B	C	D
Unified meter and A/C amp.	Self-diagnosis function		×	–	–	–
ECM	"ENGINE"	Self-diagnosis (CAN system diagnosis)	–	–	×	–
		Data monitor	×	×	×	–
IPDM E/R	"IPDM E/R"	Self-diagnosis (CAN system diagnosis)	–	–	–	×
		Data monitor	–	–	×	–
	Auto active test		–	–	–	×

WITH ACCS : Fail-safe

INFOID:0000000003941432

FAIL-SAFE FUNCTION

- If a communication error exists between the unified meter and A/C amp., and the AV control unit and preset switch for 30 seconds or longer, air conditioner is controlled under the following conditions:

Compressor : ON
Air outlet : AUTO
Air inlet : FRE (Fresh)
Blower fan speed : AUTO
Set temperature : Setting before communication error occurs

WITH ACCS : Component Part Location

INFOID:0000000003941433

ENGINE COMPARTMENT

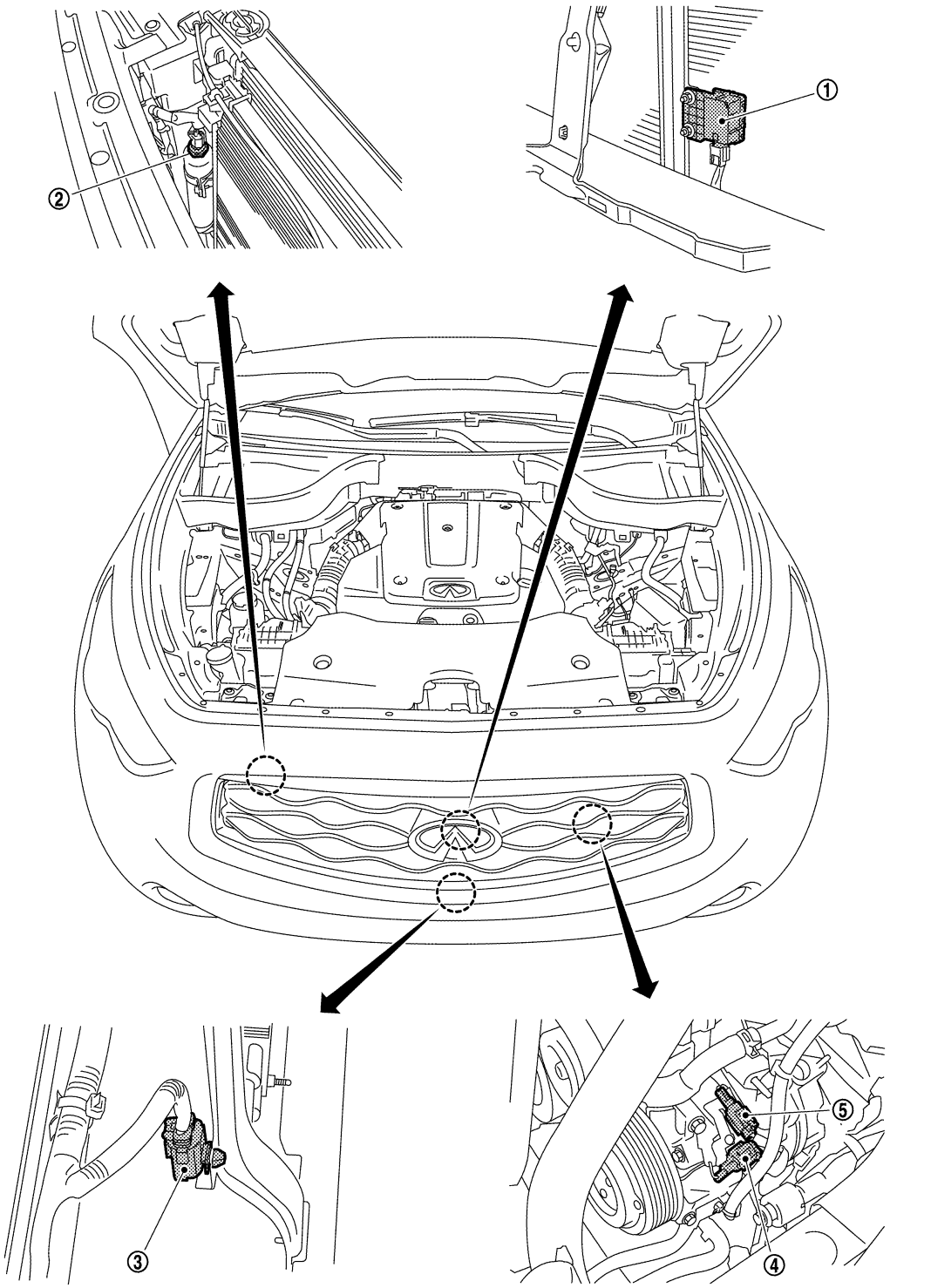

1. Gas sensor
2. Refrigerant pressure sensor
3. Ambient sensor
4. Compressor (magnet clutch)
5. Compressor (ECV)

PASSENGER COMPARTMENT

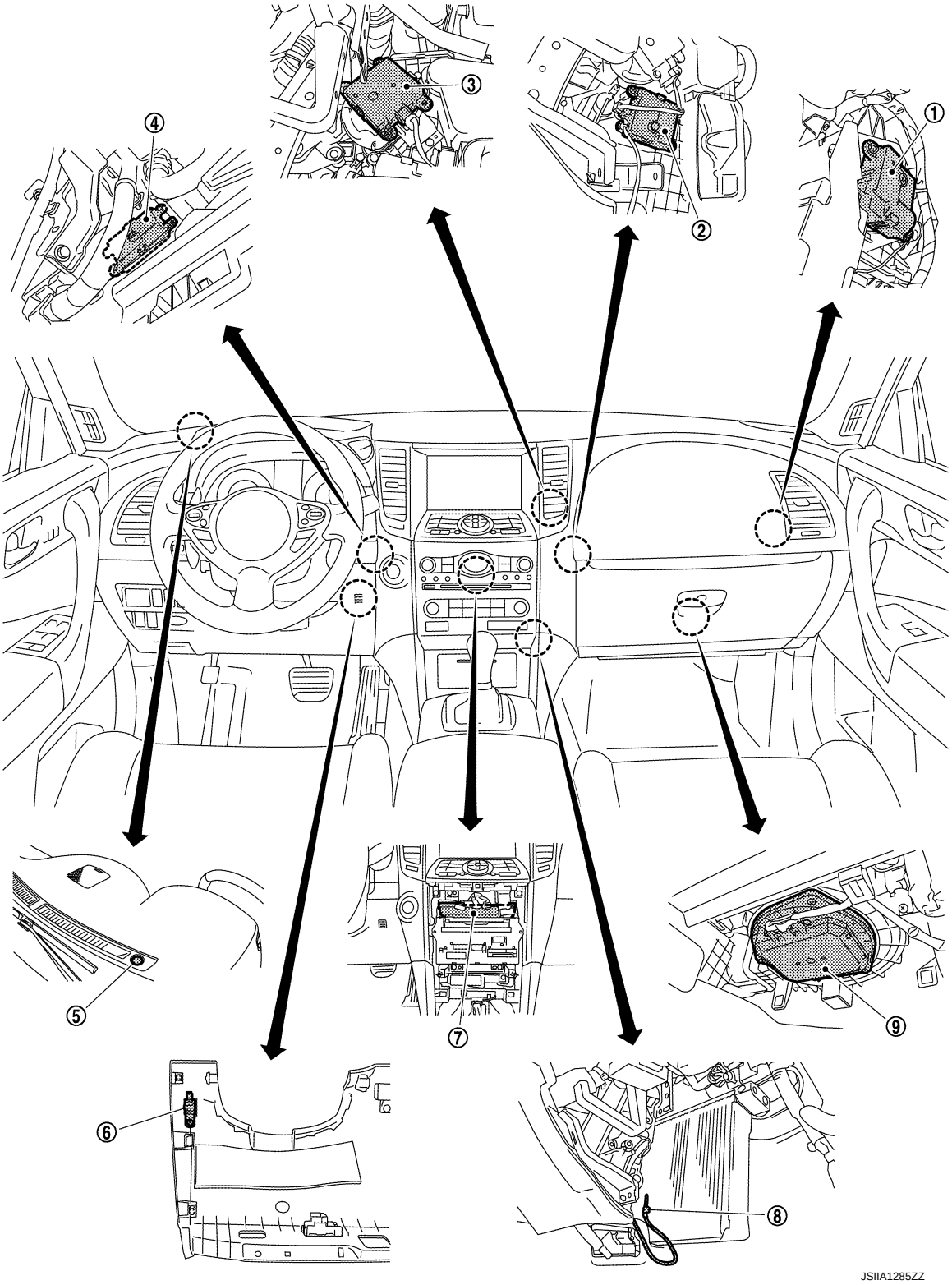

1. Intake door motor	2. Air mix door motor (passenger side)	3. Mode door motor
4. Air mix door motor (driver side)	5. Sunload sensor	6. In-vehicle sensor
7. Unified meter and A/C amp.	8. Intake sensor	9. Blower motor

WITH ACCS : Component's role

INFOID:0000000003941434

Component	Reference
Air mix door motor (driver side)	HAC-73, "Description"
Air mix door motor (passenger side)	HAC-75, "Description"
Ambient sensor	HAC-89, "Description"
Blower motor	HAC-81, "Description"
Compressor	HAC-85, "Description"
Gas sensor	HAC-101, "Description"
Intake door motor	HAC-78, "WITH ACCS : Description"
Intake sensor	HAC-98, "Description"
In-vehicle sensor	HAC-92, "Description"
Mode door motor	HAC-71, "Description"
Refrigerant pressure sensor	EC-1122, "Description"
Sunload sensor	HAC-95, "Description"
Unified meter and A/C amp.	HAC-70, "Description"

AUTOMATIC AIR CONDITIONER SYSTEM
WITHOUT ACCS

WITHOUT ACCS : System Diagram

INFOID:0000000003894085

CONTROL SYSTEM

The control system consists of input sensors, switches, unified meter and A/C amp. (microcomputer) and outputs. The relationship of these components is as shown in the figure below:

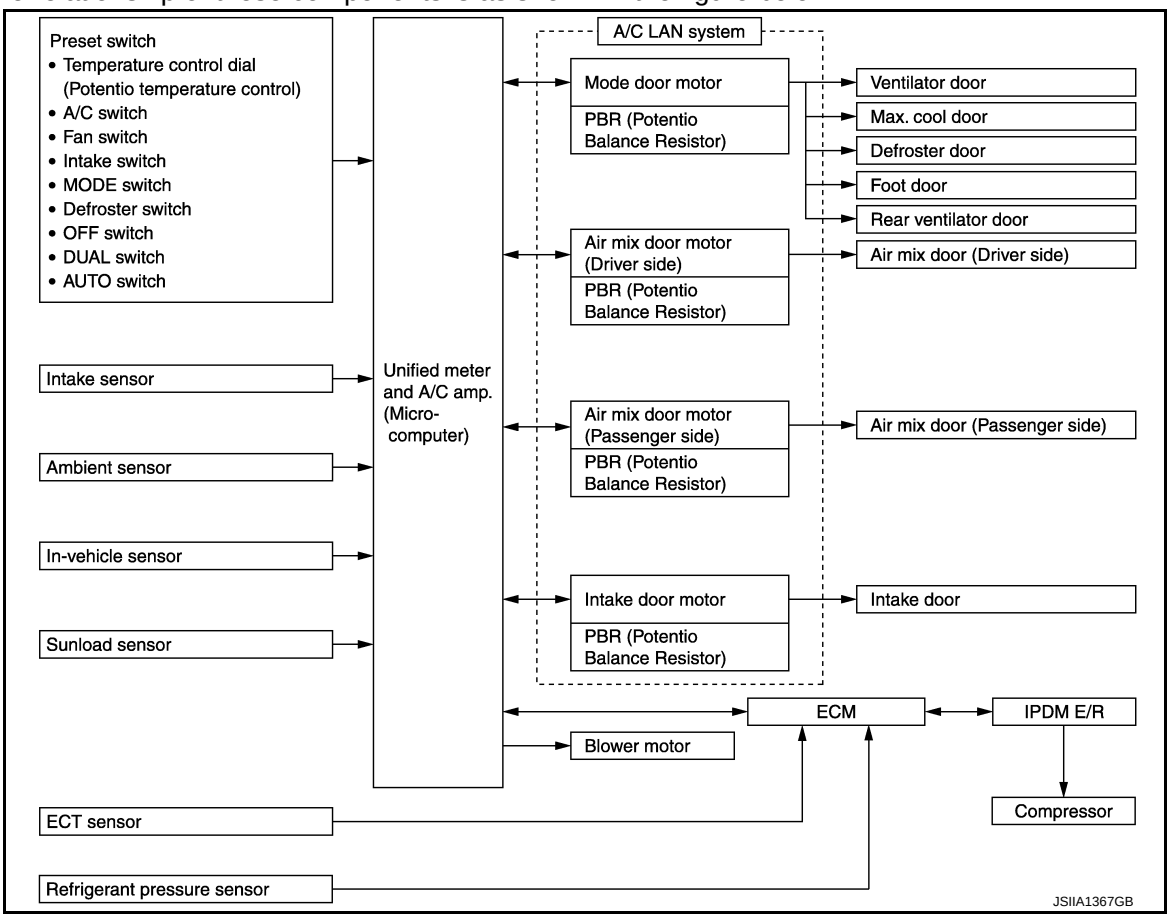

WITHOUT ACCS : System Description

INFOID:0000000003894086

CONTROL OPERATION

Display Screen

The operation status of the system is displayed on the screen.

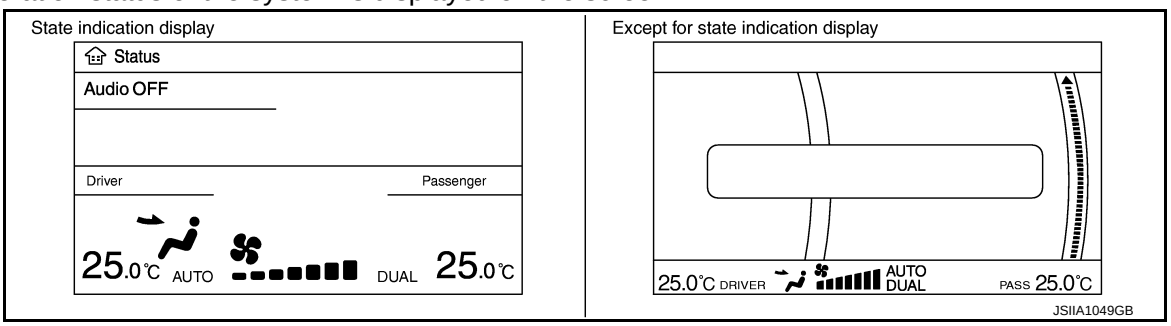

Preset Switch

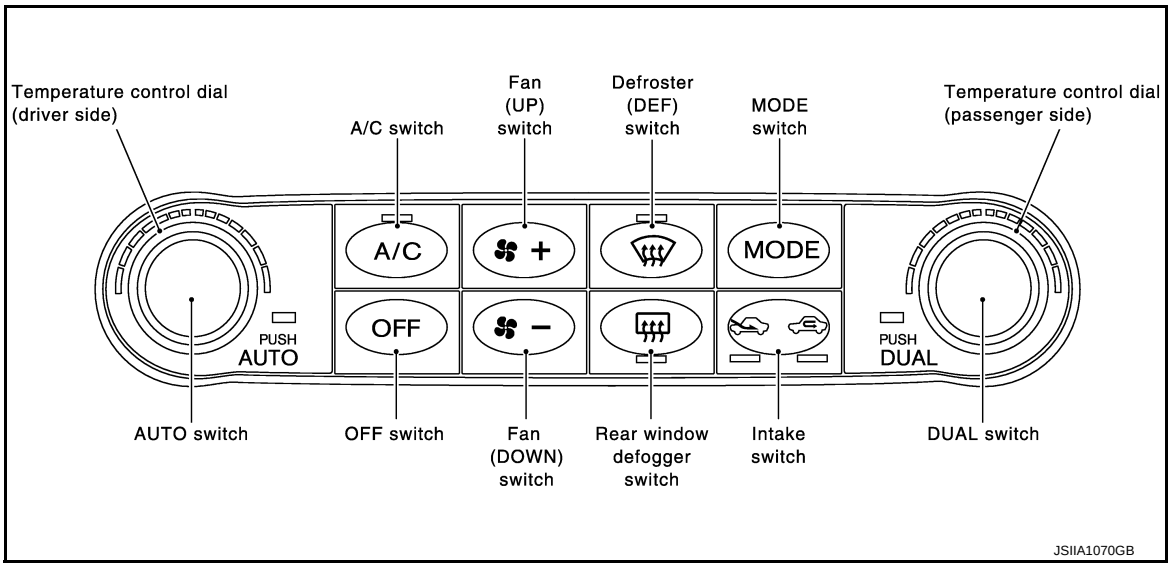

MODE Switch
The air discharge outlets is controlled with this switch.

Temperature Control Dial (Potentio Temperature Control) (Driver Side)
The set temperature is increased or decreased with this dial.

Temperature Control Dial (Potentio Temperature Control) (Passenger Side)
- The set temperature is increased or decreased with this dial.
- When the temperature control dial is turned, DUAL switch indicator turns ON.

AUTO Switch
- The compressor, intake doors, air mix doors, mode doors and blower speed are automatically controlled so that the in-vehicle temperature will reach, and be maintained at the set temperature selected by the operator.
- When pressing AUTO switch, air inlet, air outlet, fan speed, and discharge air temperature are automatically controlled.

Defroster (DEF) Switch
Mode doors are set to the defrost position with this switch. Also, intake doors are set to the outside air position, and compressor turns ON.

A/C Switch
Compressor is ON or OFF with this switch.
(Pressing the A/C switch when the A/C switch is ON turns OFF the A/C switch and compressor.)

FAN Switches
The blower speed is manually controlled with this switch. Seven speeds are available for manual control (as shown on the display screen).

OFF Switch
Compressor and blower are OFF, air inlet is set to FRE, and mode position is set to foot position.

Rear Window Defogger Switch
When indicator is ON, rear window is defogged.

Intake Switch
- When intake switch is ON, FRE indicator turns ON, and air inlet is fixed to FRE.
- When intake switch is pressed again, REC indicator turns ON, and air inlet is fixed to REC.
- When intake switch is pressed for approximately 1.5 seconds or longer, FRE and REC indicators blink twice. Then, automatic control mode is entered. Inlet status is displayed by indicator even during automatic controlled.
- When FRE indicator is turned ON, shifting mode position to D/F or DEF, or when compressor is turned from ON to OFF, intake switch is automatically turned OFF (fixed to FRE mode). REC mode can be re-entered by pressing intake switch again, and then compressor is turned ON. (Except D/F or DEF position)

DUAL Switch

- When the DUAL switch indicator is ON, the driver side and passenger side, temperature can each be set independently.
- When the DUAL switch indicator is OFF, the driver side outlet and setting temperature is applied to both sides.

DISCHARGE AIR FLOW

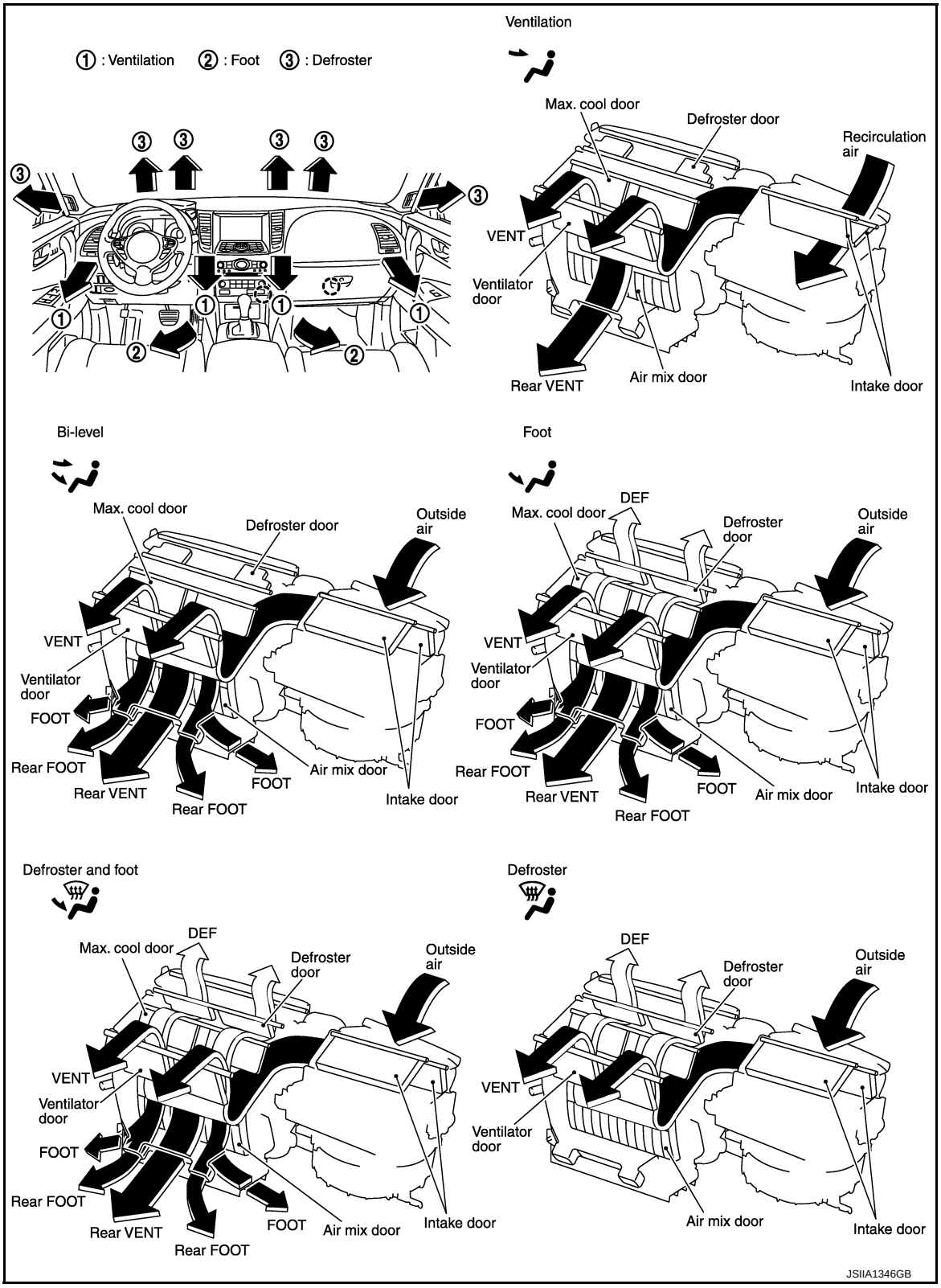

SWITCHES AND THEIR CONTROL FUNCTION

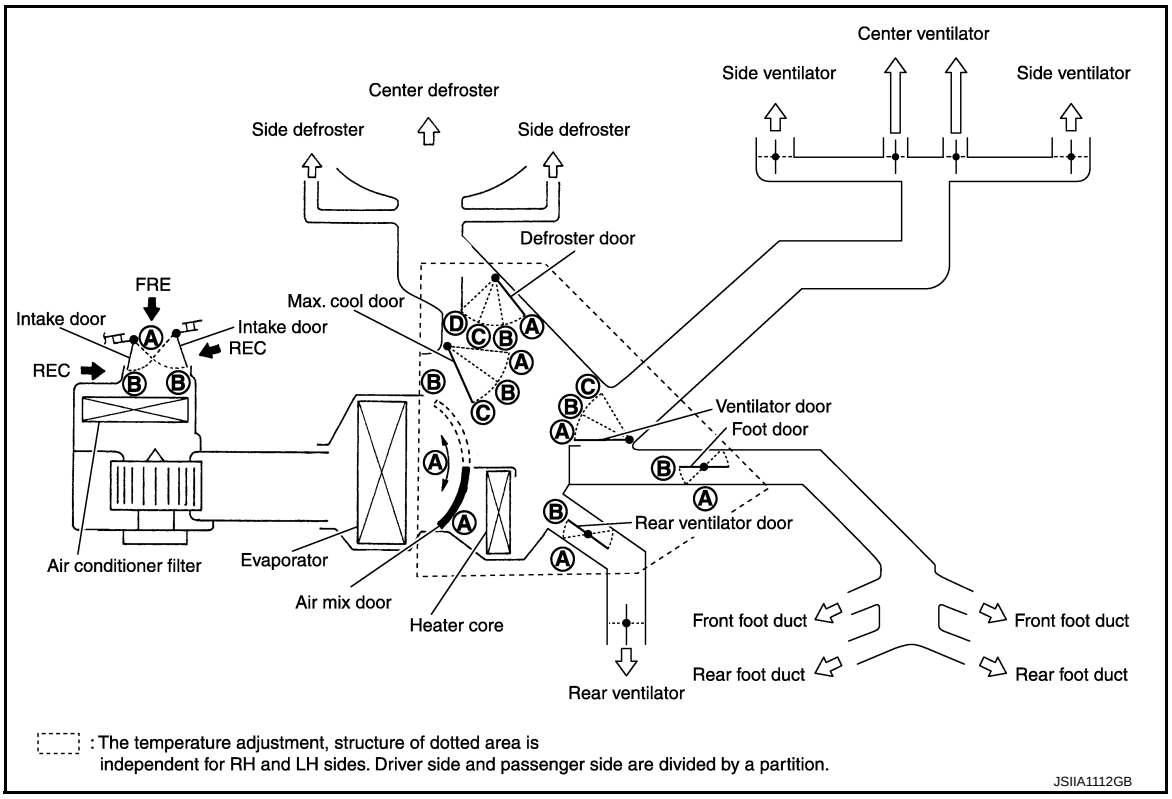

Position or switch / Door	DUAL switch	MODE switch				DEF switch		AUTO switch	Intake switch		Temperature control dial(Driver side)			Temperature control dial(Passenger side)			OFF switch
		VENT	B/L	FOOT	D/F	ON	OFF		FRE	REC							
		MODE															OFF
											18°C (60°F)	⇔	32°C (90°F)	18°C (60°F)	⇔	32°C (90°F)	
Ventilator door	—	Ⓐ	Ⓑ	Ⓒ	Ⓒ	Ⓒ	—	AUTO	—		—			—			Ⓒ
Max.cool door	—	Ⓐ	Ⓑ	Ⓒ	Ⓒ	Ⓒ			—								Ⓒ
Defroster door	—	Ⓓ	Ⓓ	Ⓒ	Ⓑ	Ⓐ			—								Ⓒ
Foot door	—	Ⓑ	Ⓑ	Ⓑ	Ⓑ	Ⓐ			—		—			—			Ⓑ
Rear ventilator door	—	Ⓑ	Ⓑ	Ⓑ	Ⓑ	Ⓐ			—		—			—			Ⓑ
Intake door	—	—			Ⓑ	Ⓑ			Ⓑ*	Ⓐ*	—			—			Ⓑ
Air mix door (Driver side)	—	—				—			—		Ⓐ	AUTO	Ⓑ	—			—
Air mix door (Passenger side)	ON	—				—			—		—			Ⓐ	AUTO	Ⓑ	
	OFF	—				—			—		Ⓐ	AUTO	Ⓑ	—			

*: Inlet status is displayed by LED when activating automatic control.

JSIIA1004GB

AIR CONDITIONER LAN CONTROL SYSTEM

The LAN (Local Area Network) system consists of unified meter and A/C amp., mode door motor, air mix door motors and intake door motor.

A configuration of these components is as shown in the figure below.

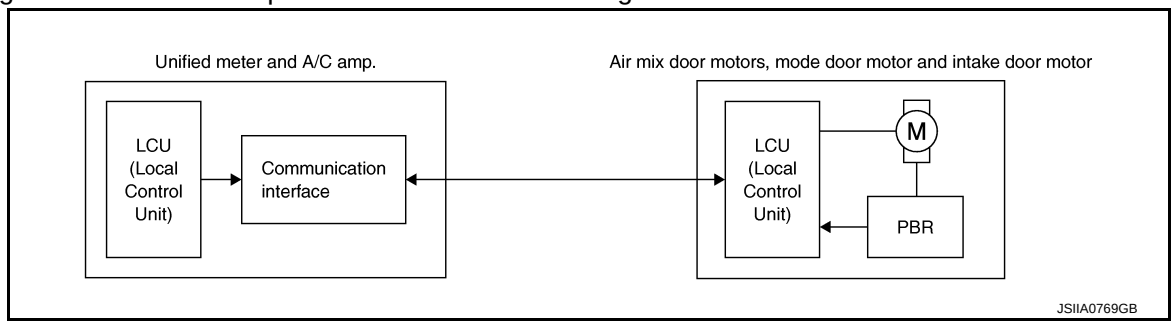

SYSTEM CONSTRUCTION

A small network is constructed between the unified meter and A/C amp., mode door motor, air mix door motors and intake door motor. The unified meter and A/C amp. and motors are connected by data transmission lines and motor power supply lines. The LAN network is built through the ground circuits of each door motor.

Addresses, motor opening angle signals, motor stop signals and error checking messages are all transmitted through the data transmission lines connecting the unified meter and A/C amp. and each door motor.

The following functions are contained in LCUs built into the mode door motor, the air mix door motors and the intake door motor.

- Address
- Motor opening angle signals
- Data transmission
- Motor stop and drive decision
- Opening angle sensor (PBR function)
- Comparison
- Decision (Unified meter and A/C amp. indicated value and motor opening angle comparison)

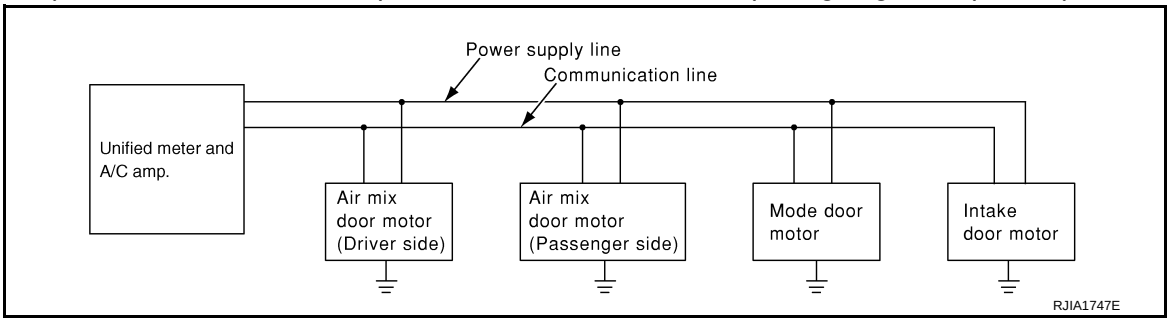

Operation

The unified meter and A/C amp. receives data from each of the sensors. The unified meter and A/C amp. sends mode door, air mix door and intake door opening angle data to the mode door motor LCU, air mix door motor LCUs and intake door motor LCU.

The mode door motor, air mix door motors and intake door motor read their respective signals according to the address signal. Opening angle indication signals received from the unified meter and A/C amp. and each of the motor position sensors is compared by the LCUs in each door motor with the existing decision and opening angles. Subsequently, HOT/COLD, DEF/VENT and FRE/REC operation is selected. The new selection data is returned to the unified meter and A/C amp.

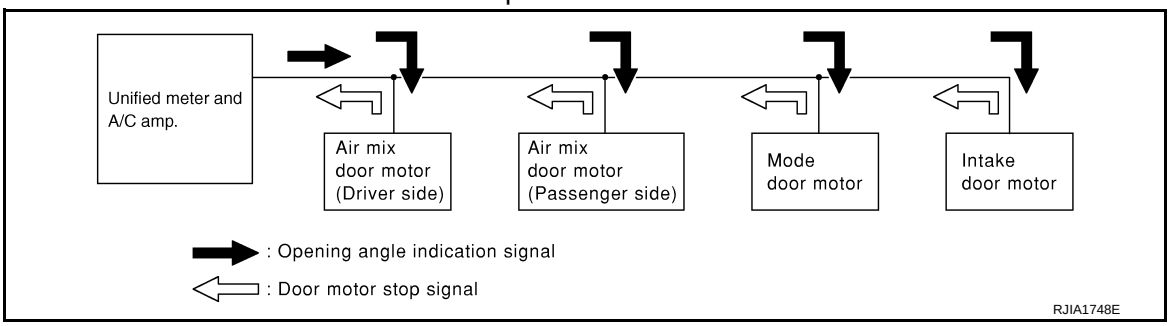

Transmission Data and Transmission Order

Unified meter and A/C amp. data is transmitted consecutively to each of the doors motor following the form as shown in the figure below.

START:
- Initial compulsory signal is sent to each of the door motors.

ADDRESS:
- Data sent from the unified meter and A/C amp. are selected according to data-based decisions made by the mode door motor, air mix door motors and intake door motor.
- If the addresses are identical, the opening angle data and error check signals are received by the door motor LCUs. The LCUs then make the appropriate error decision. If the opening angle data have no error, door control begins.
- If an error exists, the received data are rejected and corrected data received. Finally, door control is based upon the corrected opening angle data.

OPENING ANGLE:
- Data that shows the indicated door opening angle of each door motor.

ERROR CHECK:
- In this procedure, transmitted and received data is checked for errors. Error data are then compiled. The error check prevents corrupted data from being used by the mode door motor, the air mix door motors and the intake door motor. Error data can be related to the following symptoms.
- Malfunction of electrical frequency
- Poor electrical connections
- Signal leakage from transmission lines
- Signal level fluctuation

STOP SIGNAL:
- At the end of each transmission, a stop operation, in-operation, or internal malfunction message is delivered to the unified meter and A/C amp. This completes one data transmission and control cycle.

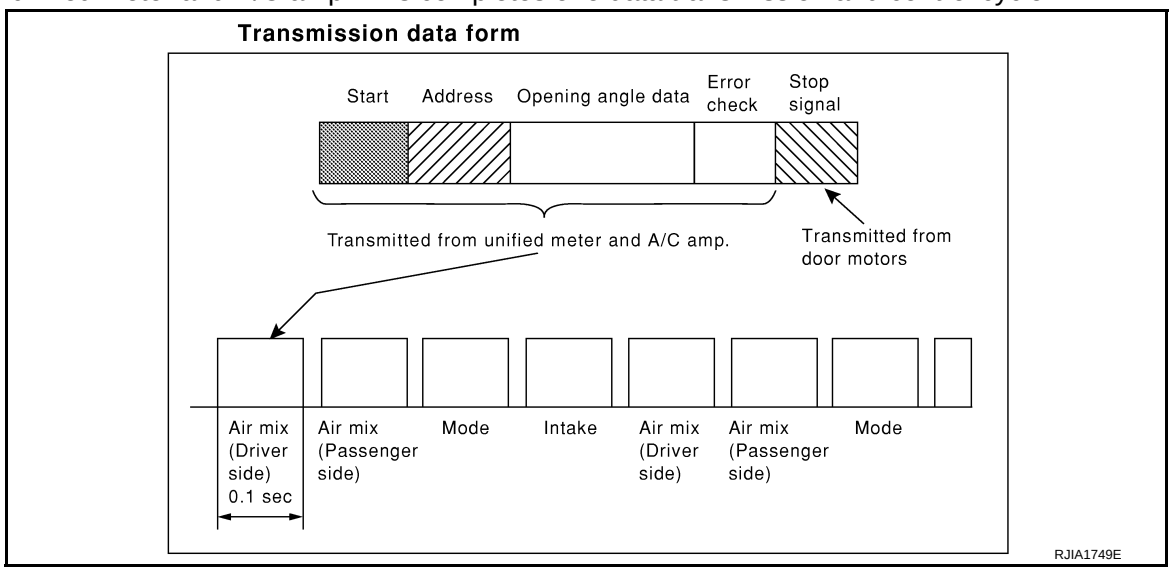

WITHOUT ACCS : Component Part Location

INFOID:0000000003894087

ENGINE COMPARTMENT

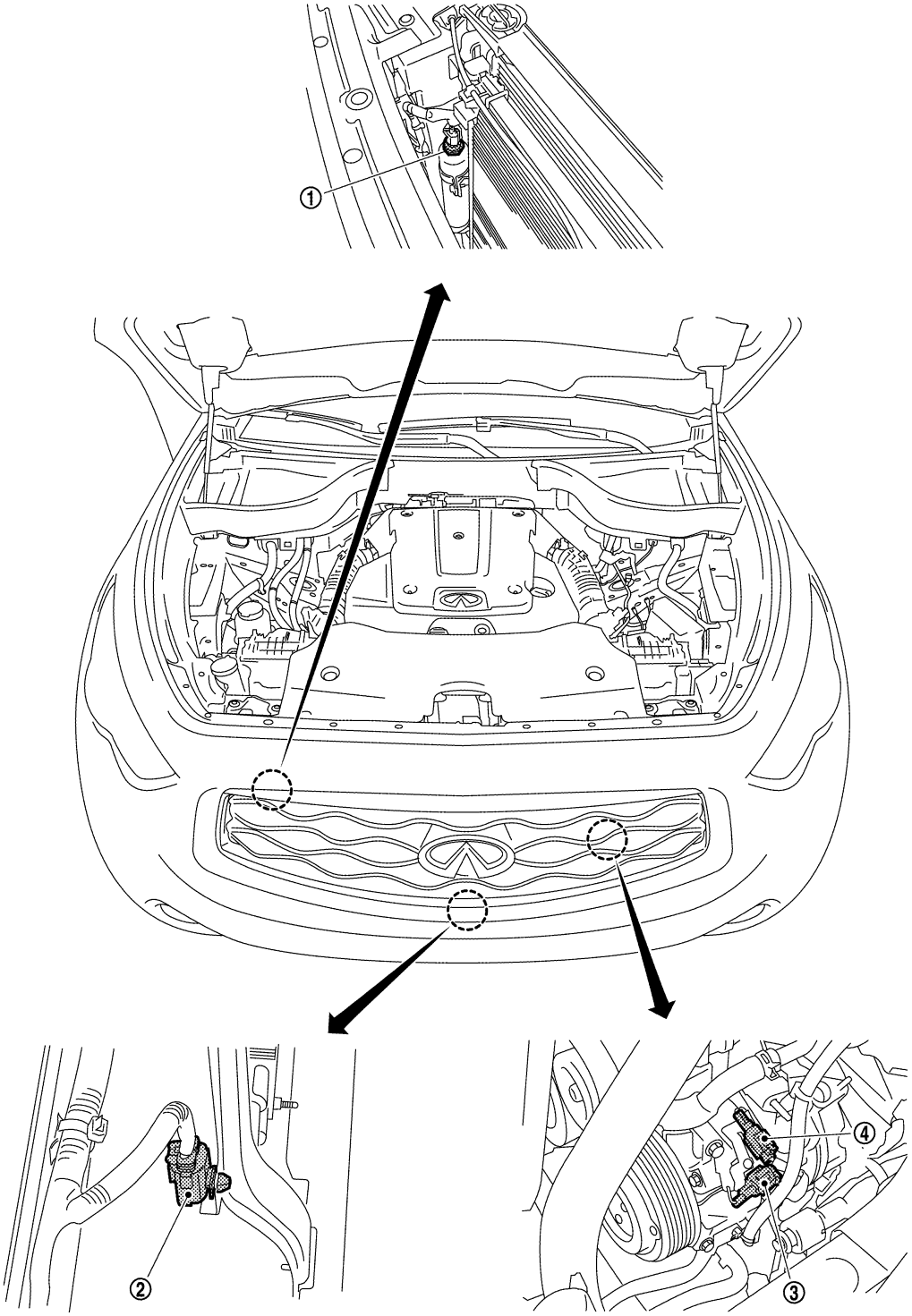

1. Refrigerant pressure sensor
2. Ambient sensor
3. Compressor (magnet clutch)
4. Compressor (ECV)

PASSENGER COMPARTMENT

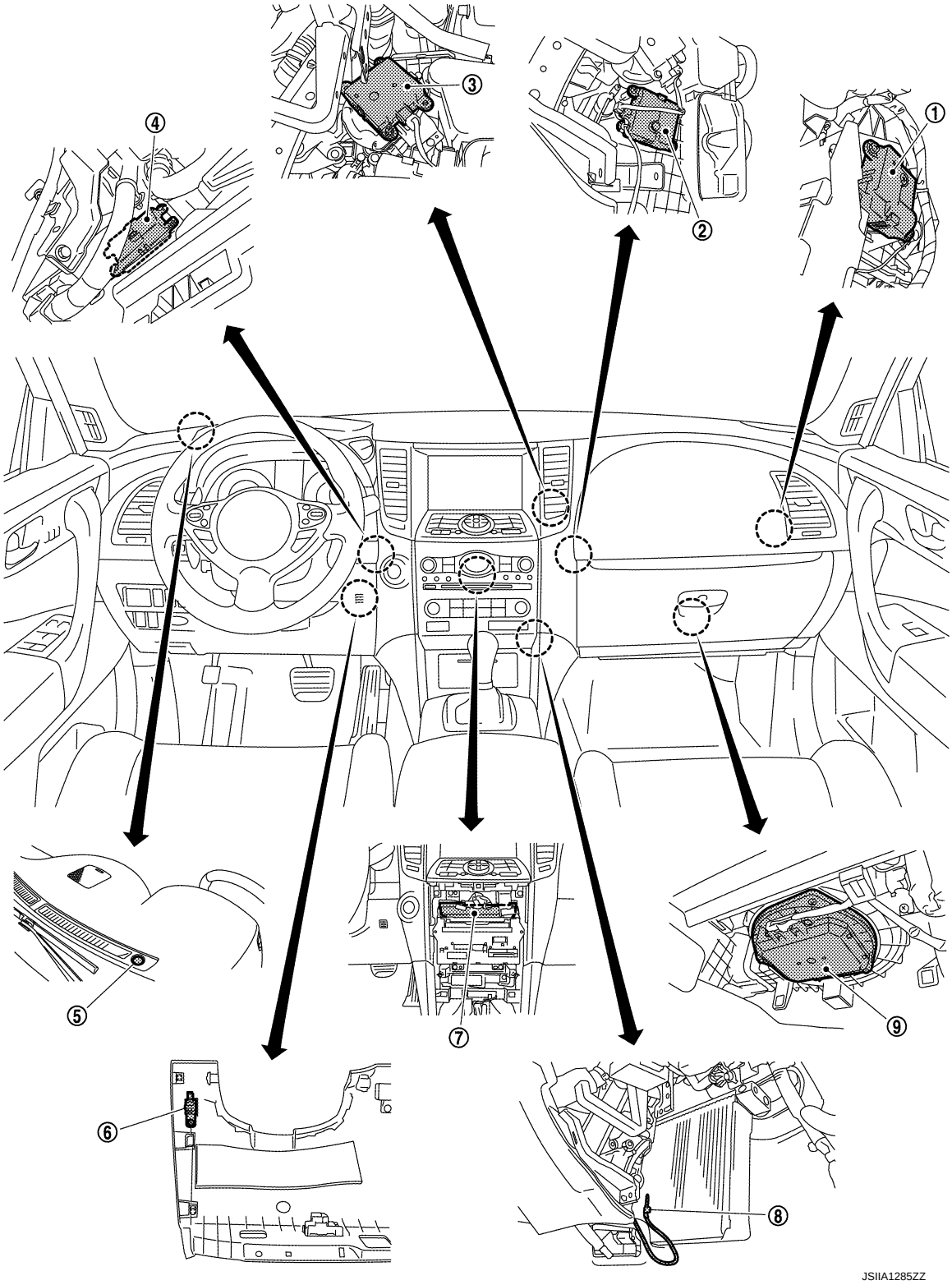

1. Intake door motor
2. Air mix door motor (passenger side)
3. Mode door motor
4. Air mix door motor (driver side)
5. Sunload sensor
6. In-vehicle sensor
7. Unified meter and A/C amp.
8. Intake sensor
9. Blower motor

WITHOUT ACCS : Component Description

INFOID:0000000003894088

Component	Reference
Air mix door motor (driver side)	HAC-73, "Description"
Air mix door motor (passenger side)	HAC-75, "Description"
Ambient sensor	HAC-89, "Description"
Blower motor	HAC-81, "Description"
Compressor	HAC-85, "Description"
Intake door motor	HAC-77, "WITHOUT ACCS : Description"
Intake sensor	HAC-98, "Description"
In-vehicle sensor	HAC-92, "Description"
Mode door motor	HAC-71, "Description"
Refrigerant pressure sensor	EC-496, "Description"
Sunload sensor	HAC-95, "Description"
Unified meter and A/C amp.	HAC-70, "Description"

WITH ACCS

WITH ACCS : System Diagram

INFOID:0000000003941435

CONTROL SYSTEM

- The adoption of the advanced climate control system (ACCS) enables the maintenance of clean air in the vehicle by combining the plasmacluster™ ion generation function, the automatic recirculation control function, and a high performance filter.
  NOTE:
  - Plasmacluster™ ion technology developed by Sharp Corporation is installed in this item.
  - Plasmacluster™ is a trademark of Sharp Corporation.

- The control system consists of input sensors, switches, unified meter and A/C amp. (microcomputer) and outputs. The relationship of these components is as shown in the figure below:

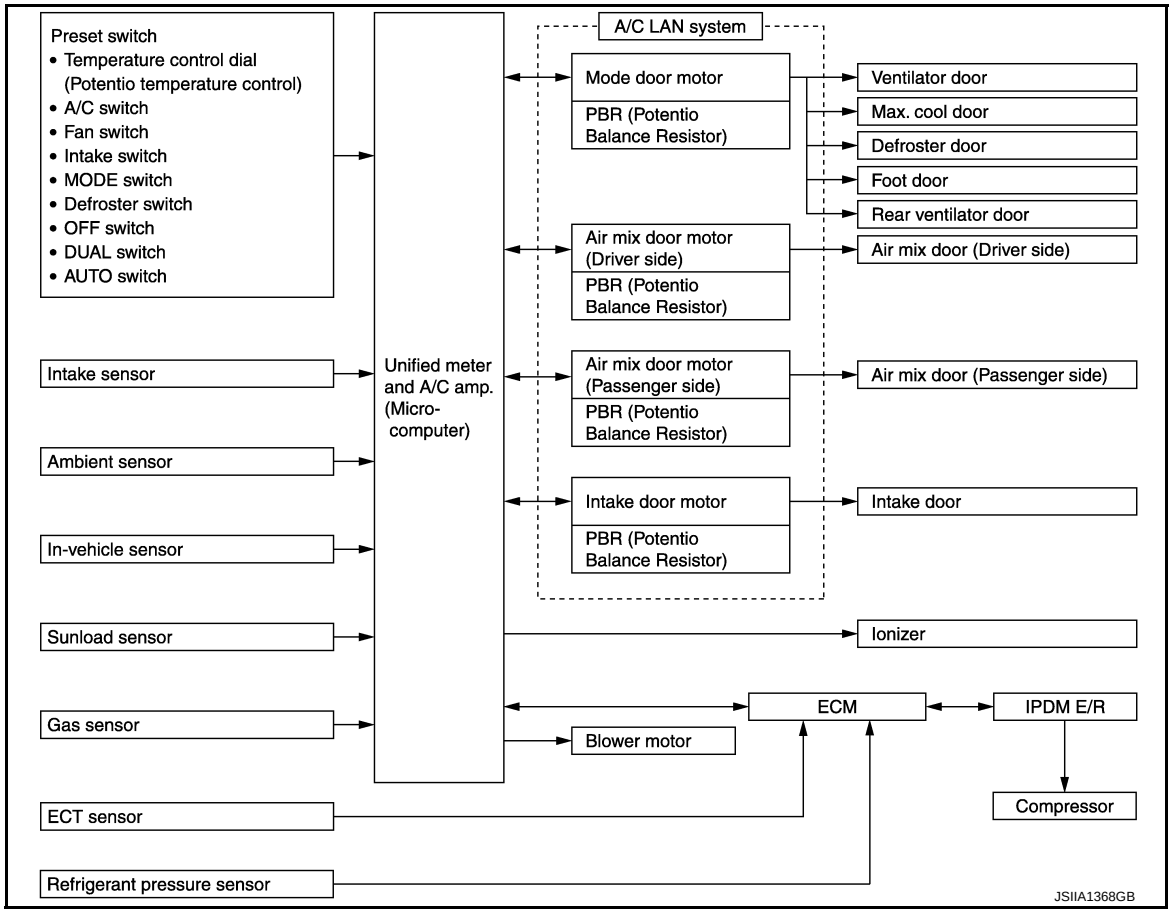

WITH ACCS : System Description

INFOID:0000000003941436

CONTROL OPERATION

Display Screen

The operation status of the system is displayed on the screen.

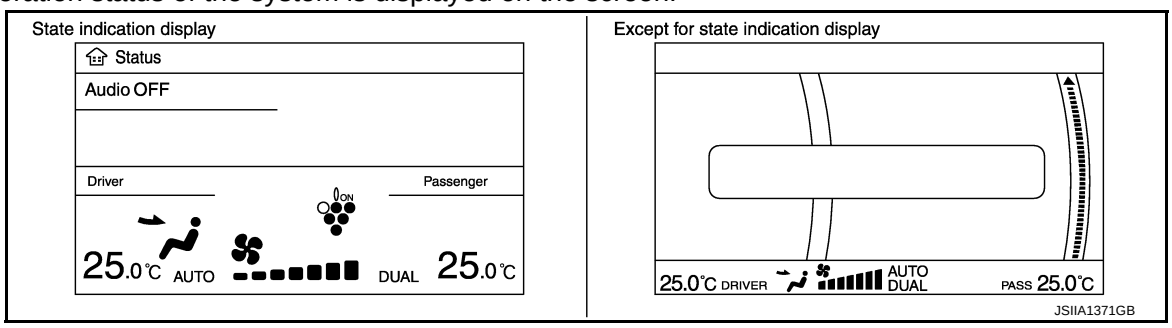

Preset Switch

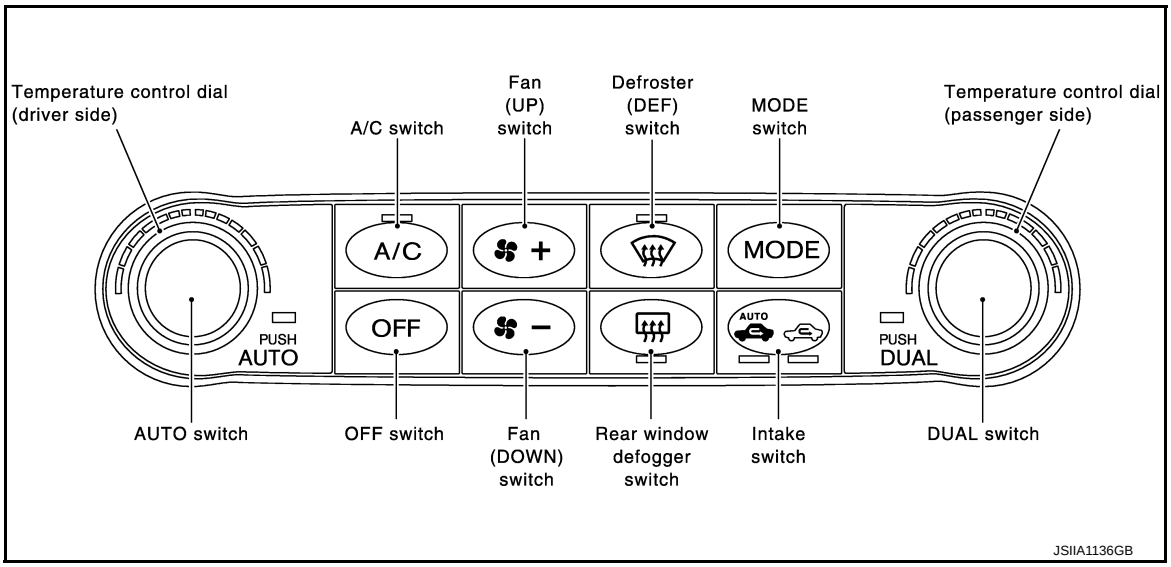

MODE Switch

The air discharge outlets is controlled with this switch.

Temperature Control Dial (Potentio Temperature Control) (Driver Side)

The set temperature is increased or decreased with this dial.

Temperature Control Dial (Potentio Temperature Control) (Passenger Side)

- The set temperature is increased or decreased with this dial.
- When the temperature control dial is turned, DUAL switch indicator turns ON.

AUTO Switch

- The compressor, intake doors, air mix doors, mode doors and blower speed are automatically controlled so that the in-vehicle temperature will reach, and be maintained at the set temperature selected by the operator.
- When pressing AUTO switch, air inlet, air outlet, fan speed, and discharge air temperature are automatically controlled.

Defroster (DEF) Switch

Mode doors are set to the defrost position with this switch. Also, intake doors are set to the outside air position, and compressor turns ON.

A/C Switch

Compressor is ON or OFF with this switch.
(Pressing the A/C switch when the A/C switch is ON turns OFF the A/C switch and compressor.)

FAN Switches

The blower speed is manually controlled with this switch. Seven speeds are available for manual control (as shown on the display screen).

OFF Switch

Compressor and blower are OFF, air inlet is set to FRE, and mode position is set to foot position.

Rear Window Defogger Switch

When indicator is ON, rear window is defogged.

Intake Switch

- When AUTO switch is pressed, AUTO INTAKE indicator and REC indicator turns ON, and air inlet is automatic control.
- When intake switch is pressed, AUTO INTAKE indicator and REC indicator turns OFF, and air inlet is fixed to FRE.
- When intake switch is pressed again, REC indicator turns ON, and air inlet is fixed to REC.
- Then auto intake mode is entered, inlet status is displayed by REC indicator even during automatic controlled.
- When REC indicator is turned OFF, shifting mode position to D/F or DEF or when compressor is turned from ON to OFF, intake mode position is fixed to FRE mode. REC mode can be re-entered by pressing intake switch again, and then compressor is turned ON. (Except D/F or DEF position)

DUAL Switch

- When the DUAL switch indicator is ON, the driver side and passenger side, temperature can each be set independently.
- When the DUAL switch indicator is OFF, the driver side outlet and setting temperature is applied to both sides.

DISCHARGE AIR FLOW

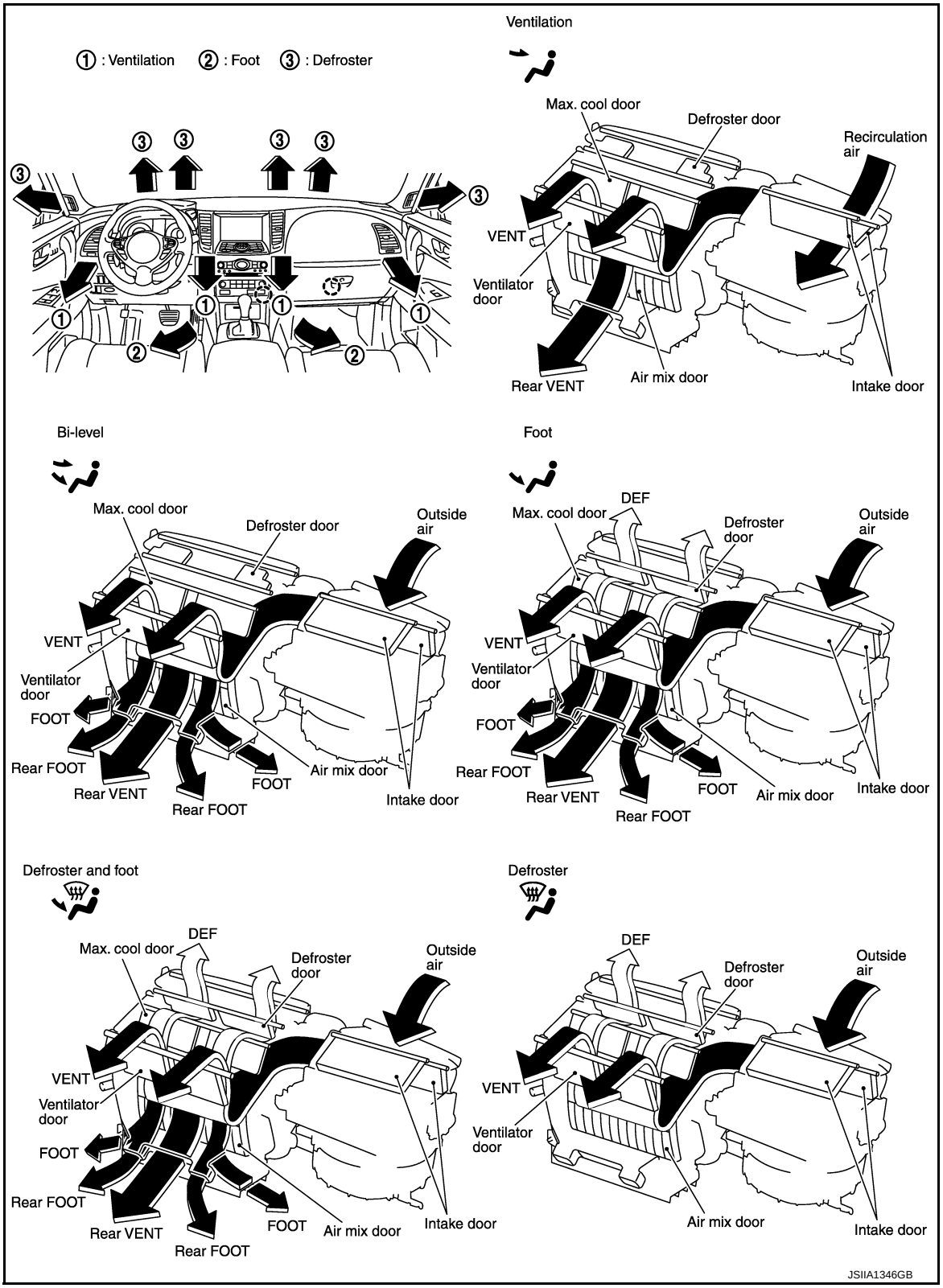

SWITCHES AND THEIR CONTROL FUNCTION

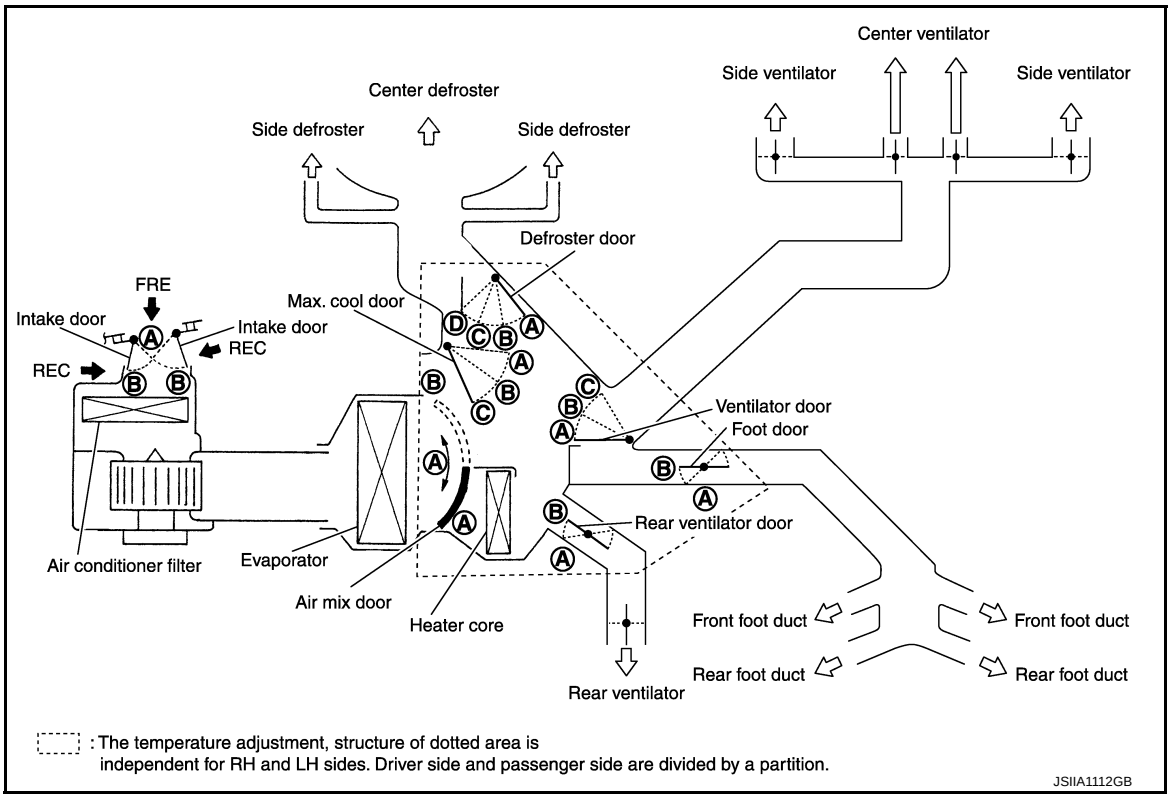

Position or switch / Door	DUAL switch	MODE switch				DEF switch	AUTO switch	Intake switch			Temperature control dial(Driver side)			Temperature control dial(Passenger side)			OFF switch
		VENT	B/L	FOOT	D/F			AUTO	FRE	REC	18°C (60°F)	⇔	32°C (90°F)	18°C (60°F)	⇔	32°C (90°F)	OFF
Ventilator door	—	Ⓐ	Ⓑ	Ⓒ	Ⓒ	Ⓒ	AUTO	—			—			—			Ⓒ
Max.cool door	—	Ⓐ	Ⓑ	Ⓒ	Ⓒ	Ⓒ		—									Ⓒ
Defroster door	—	Ⓓ	Ⓓ	Ⓒ	Ⓑ	Ⓐ		—									Ⓒ
Foot door	—	Ⓑ	Ⓑ	Ⓑ	Ⓑ	Ⓐ		—			—			—			Ⓑ
Rear ventilator door	—	Ⓑ	Ⓑ	Ⓑ	Ⓑ	Ⓐ		—			—			—			Ⓑ
Intake door	—	—			Ⓑ	Ⓑ		AUTO	Ⓑ	Ⓐ	—			—			Ⓑ
Air mix door (Driver side)	—	—				—		—			Ⓐ	AUTO	Ⓑ	—			—
Air mix door (Passenger side)	ON	—				—		—			—			Ⓐ	AUTO	Ⓑ	
	OFF	—				—		—			Ⓐ	AUTO	Ⓑ	—			

JSIIA1344GB

AIR CONDITIONER LAN CONTROL SYSTEM

The LAN (Local Area Network) system consists of unified meter and A/C amp., mode door motor, air mix door motors and intake door motor.

A configuration of these components is as shown in the figure below.

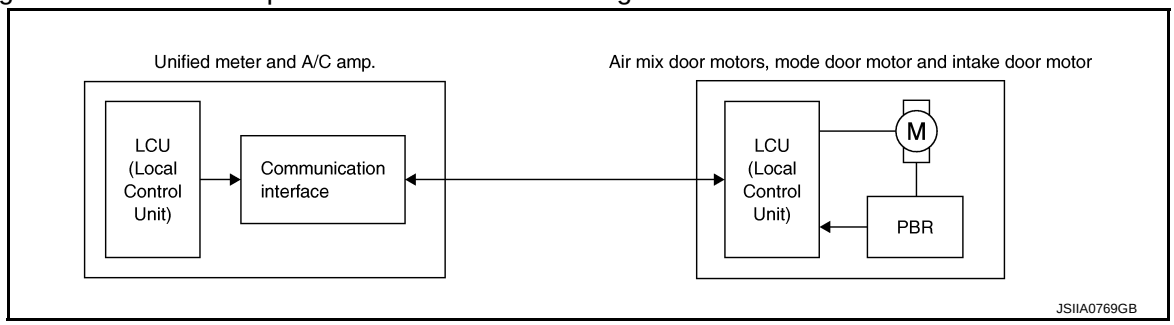

SYSTEM CONSTRUCTION

A small network is constructed between the unified meter and A/C amp., mode door motor, air mix door motors and intake door motor. The unified meter and A/C amp. and motors are connected by data transmission lines and motor power supply lines. The LAN network is built through the ground circuits of each door motor.

Addresses, motor opening angle signals, motor stop signals and error checking messages are all transmitted through the data transmission lines connecting the unified meter and A/C amp. and each door motor.

The following functions are contained in LCUs built into the mode door motor, the air mix door motors and the intake door motor.

- Address
- Motor opening angle signals
- Data transmission
- Motor stop and drive decision
- Opening angle sensor (PBR function)
- Comparison
- Decision (Unified meter and A/C amp. indicated value and motor opening angle comparison)

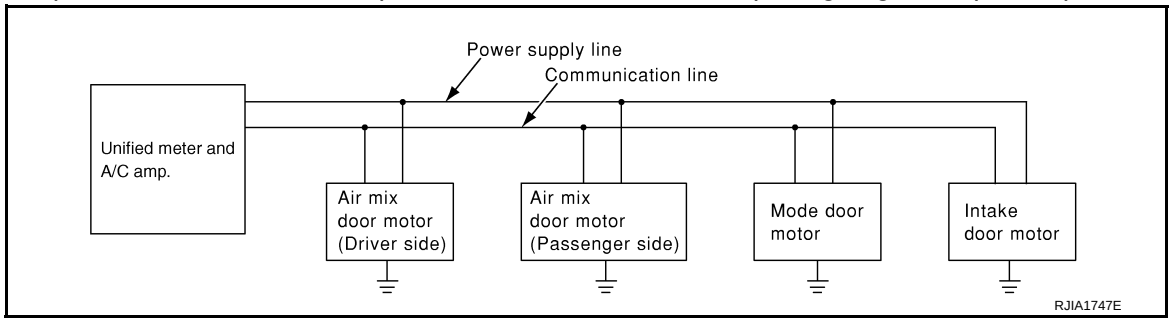

Operation

The unified meter and A/C amp. receives data from each of the sensors. The unified meter and A/C amp. sends mode door, air mix door and intake door opening angle data to the mode door motor LCU, air mix door motor LCUs and intake door motor LCU.

The mode door motor, air mix door motors and intake door motor read their respective signals according to the address signal. Opening angle indication signals received from the unified meter and A/C amp. and each of the motor position sensors is compared by the LCUs in each door motor with the existing decision and opening angles. Subsequently, HOT/COLD, DEF/VENT and FRE/REC operation is selected. The new selection data is returned to the unified meter and A/C amp.

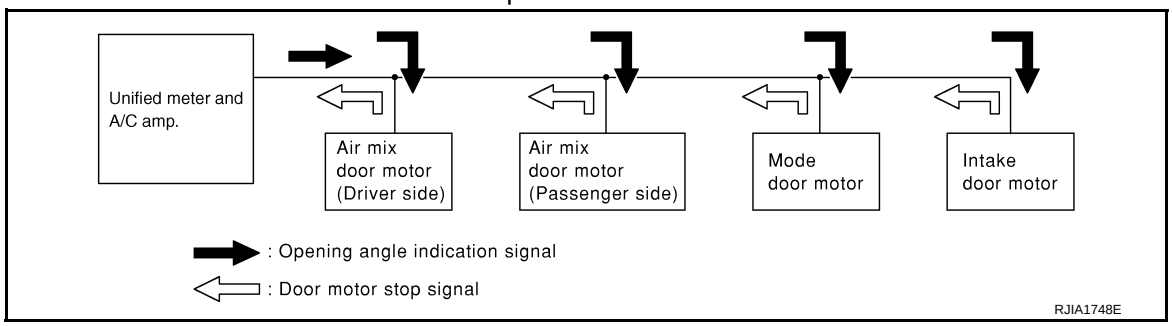

Transmission Data and Transmission Order

Unified meter and A/C amp. data is transmitted consecutively to each of the doors motor following the form as shown in the figure below.

START:
- Initial compulsory signal is sent to each of the door motors.

ADDRESS:
- Data sent from the unified meter and A/C amp. are selected according to data-based decisions made by the mode door motor, air mix door motors and intake door motor.
- If the addresses are identical, the opening angle data and error check signals are received by the door motor LCUs. The LCUs then make the appropriate error decision. If the opening angle data have no error, door control begins.
- If an error exists, the received data are rejected and corrected data received. Finally, door control is based upon the corrected opening angle data.

OPENING ANGLE:
- Data that shows the indicated door opening angle of each door motor.

ERROR CHECK:
- In this procedure, transmitted and received data is checked for errors. Error data are then compiled. The error check prevents corrupted data from being used by the mode door motor, the air mix door motors and the intake door motor. Error data can be related to the following symptoms.
- Malfunction of electrical frequency
- Poor electrical connections
- Signal leakage from transmission lines
- Signal level fluctuation

STOP SIGNAL:
- At the end of each transmission, a stop operation, in-operation, or internal malfunction message is delivered to the unified meter and A/C amp. This completes one data transmission and control cycle.

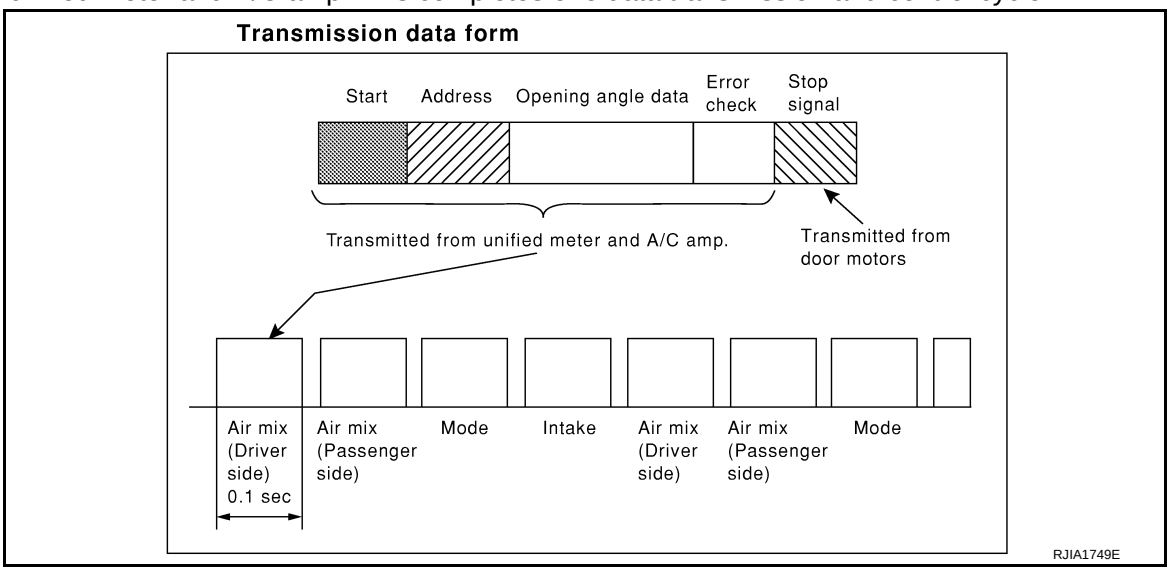

WITH ACCS : Component Part Location

INFOID:0000000003941437

ENGINE COMPARTMENT

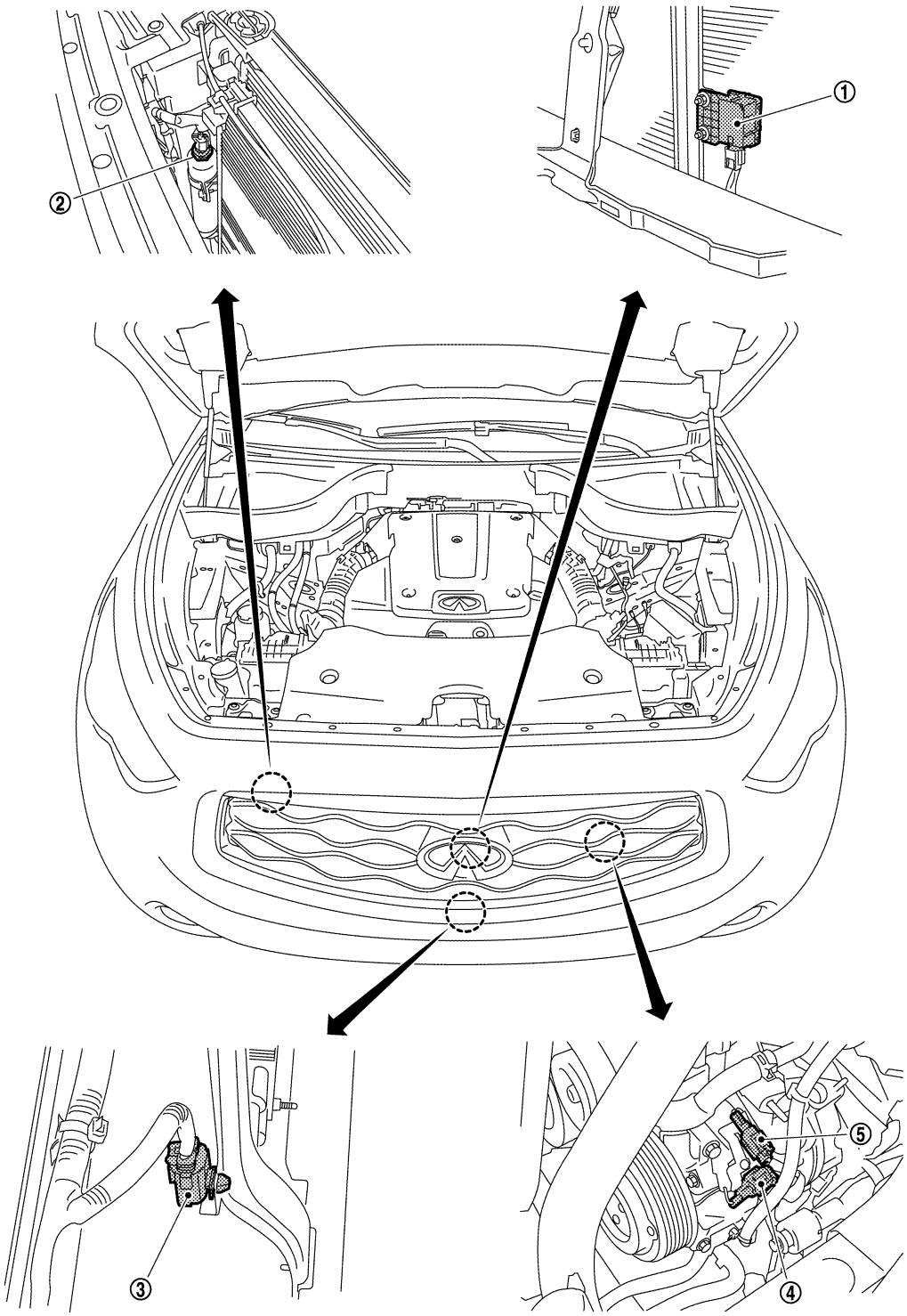

JSIIA1292ZZ

1. Gas sensor
2. Refrigerant pressure sensor
3. Ambient sensor
4. Compressor (magnet clutch)
5. Compressor (ECV)

PASSENGER COMPARTMENT

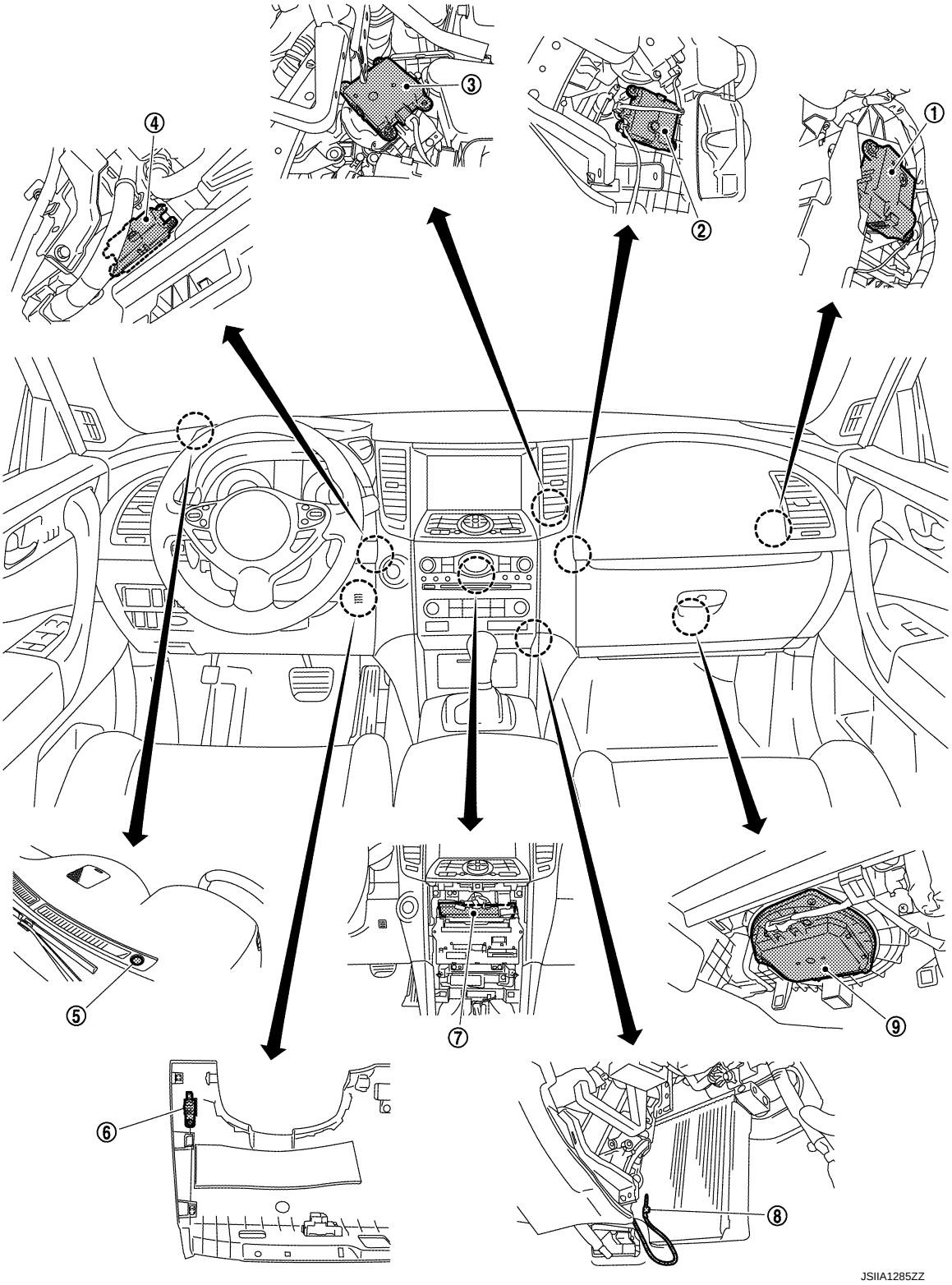

1. Intake door motor	2. Air mix door motor (passenger side)	3. Mode door motor
4. Air mix door motor (driver side)	5. Sunload sensor	6. In-vehicle sensor
7. Unified meter and A/C amp.	8. Intake sensor	9. Blower motor

WITH ACCS : Component Description

INFOID:0000000003941438

Component	Reference
Air mix door motor (driver side)	HAC-73, "Description"
Air mix door motor (passenger side)	HAC-75, "Description"
Ambient sensor	HAC-89, "Description"
Blower motor	HAC-81, "Description"
Compressor	HAC-85, "Description"
Gas sensor	HAC-101, "Description"
Intake door motor	HAC-78, "WITH ACCS : Description"
Intake sensor	HAC-98, "Description"
In-vehicle sensor	HAC-92, "Description"
Mode door motor	HAC-71, "Description"
Refrigerant pressure sensor	EC-1122, "Description"
Sunload sensor	HAC-95, "Description"
Unified meter and A/C amp.	HAC-70, "Description"

PLASMACLUSTER SYSTEM

System Diagram

INFOID:0000000003984918

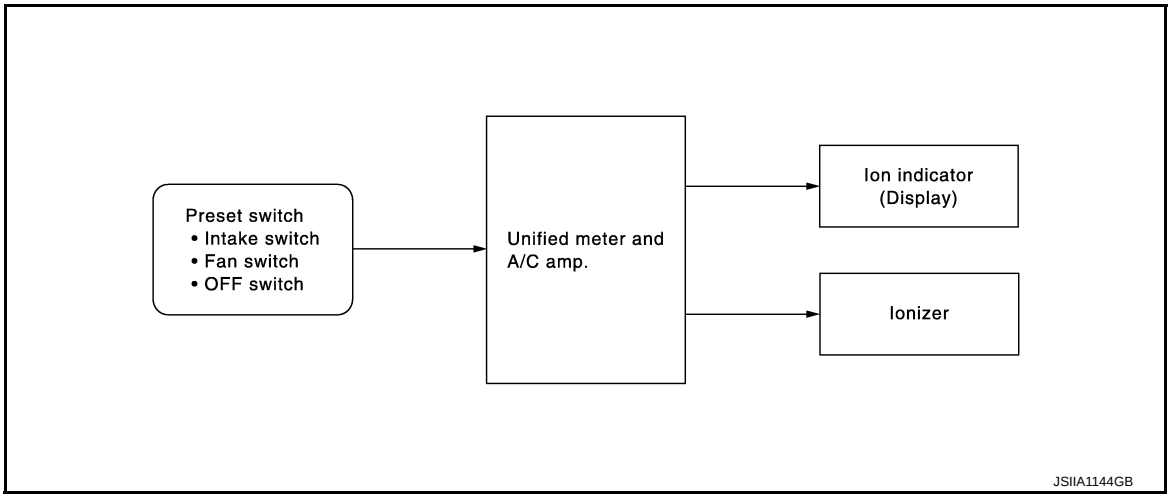

System Description

INFOID:0000000003984919

- Plasmacluster™ ion generation function, which generates ions inactivating bacteria and supplies to the passenger compartment through air blown from air conditioner, has been adopted.
- Airborne mold and bacteria in the passenger compartment are inactivated by the effect of Plasmacluster™ ion.
- Plasmacluster™ ion generation function is switched between 2 ion generation modes (clean mode and ion control mode) automatically, and maintain the ion balance in the passenger compartment close to that in nature.
- The operating condition is displayed in the ion indicator in the display.

NOTE:

- Plasmacluster™ ion technology developed by Sharp Corporation is installed in this item.
- Plasmacluster™ is a trademark of Sharp Corporation.

OPERATION DESCRIPTION

- The Plasmacluster™ ion generation function operates synchronized with the blower motor. The Plasmacluster™ ion generation function operates when the blower motor operates.
- 2 ion generation modes (clean mode and ion control mode) are switched every 15 minutes while blower motor turns ON with ignition switch ON.
- When AUTO INTAKE indicator is turned ON, Plasmacluster™ ion generation function extends the operation time of the clean mode to approximately 30 minutes for deactivating impurities more actively.

Condition	Clean mode	Ion control mode
AUTO INTAKE indicator: OFF	15 minutes	15 minutes
AUTO INTAKE indicator: ON	30 minutes	15 minutes

NOTE:
When the AUTO INTAKE indicator is not turned ON.
- Ignition switch: OFF
- Blower motor: OFF
- Mode position: Defroster (DEF)
- Ambient temperature: At about 0°C or below (Reactivate at about 2°C or above)
- When gas sensor is malfunctioning

- When the blower motor is stopped, the Plasmacluster™ ion generation function also stops operating (Ion indicator is OFF).

Clean mode	Emits positive and negative ions into air for deactivating impurities actively.
Ion control mode	Emits more negative ions after deactivating impurities actively in clean mode.

1. Clean mode operation
   Ion indicator (blue) (1) in the display is turns ON as per the followings.
   - Approximately 15 minutes after starting the blower motor.
   - Approximately 30 minutes after the AUTO INTAKE indicator is turned ON while the blower motor is operating.
   - Clean mode is switched to operate, 15 minutes after ion control mode in operation.

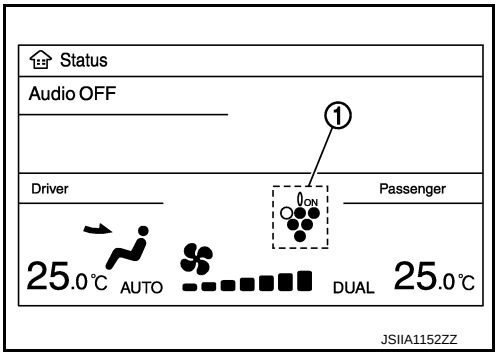

2. Ion control mode operation
   Ion indicator (green) in the display is turns ON as per the followings.
   - Ion control mode is switched to operate, 15 minutes after clean mode in operation.
   - After approximately 30 seconds of clean mode operation time has passed while the AUTO INTAKE indicator is ON.

Component Part Location

INFOID:0000000003984920

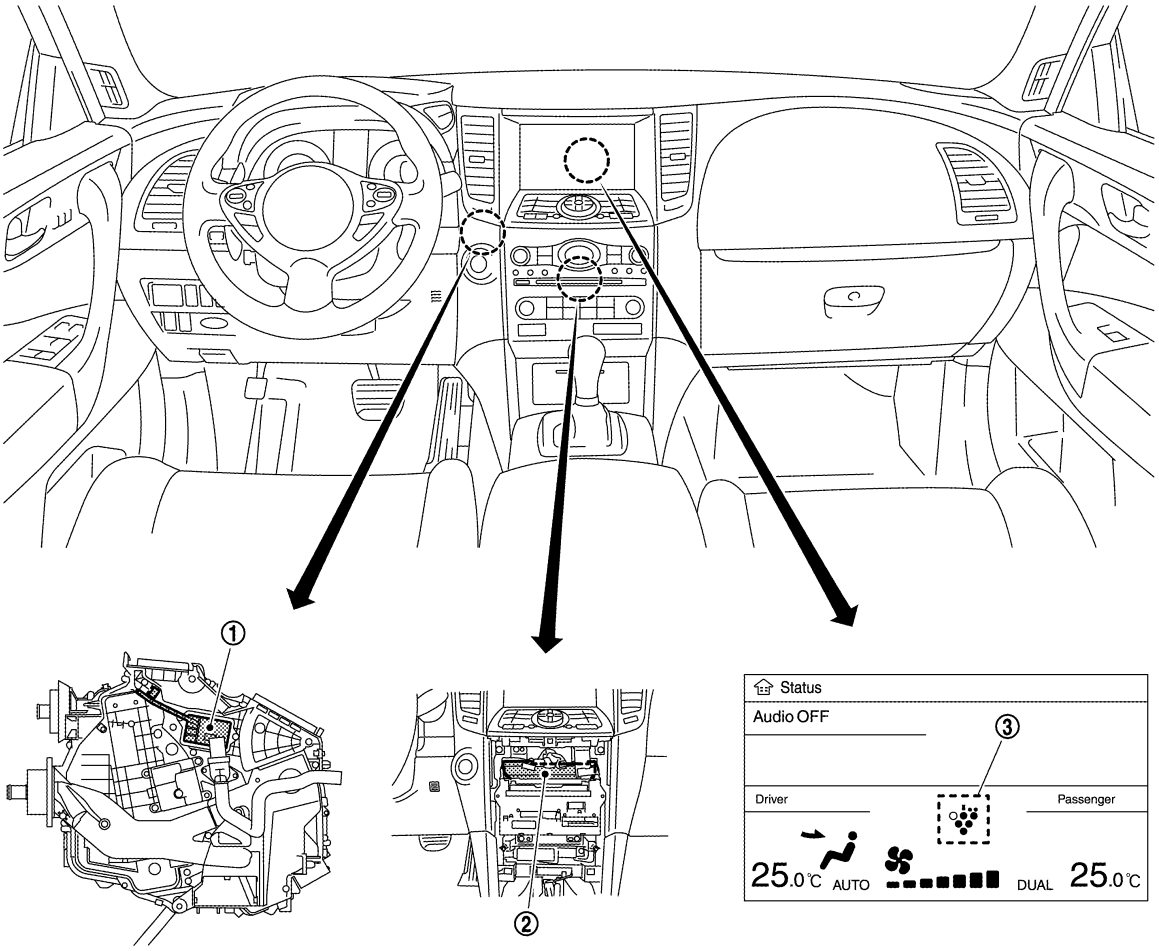

1. Ionizer
2. Unified meter and A/C amp.
3. Ion indicator

Component Description

INFOID:0000000003984921

Component	Description
Unified meter and A/C amp.	The unified meter and A/C amp. controls ionizer ON/OFF and shifts an ion generation function.
Ion indicator	Plasmacluster ion generation function operating condition is displayed in the ion indicator in the display.
Ionizer	HAC-104, "Description"

CAN COMMUNICATION SYSTEM

System Description

INFOID:0000000003894089

CAN (Controller Area Network) is a serial communication line for real time application. It is an on-vehicle multiplex communication line with high data communication speed and excellent error detection ability. Many electronic control units are equipped onto a vehicle, and each control unit shares information and links with other control units during operation (not independent). In CAN communication, control units are connected with 2 communication lines (CAN-H line, CAN-L line) allowing a high rate of information transmission with less wiring. Each control unit transmits/receives data but selectively reads required data only. For details, refer to LAN-31, "CAN System Specification Chart".

MODE DOOR CONTROL SYSTEM

System Diagram

INFOID:0000000003894090

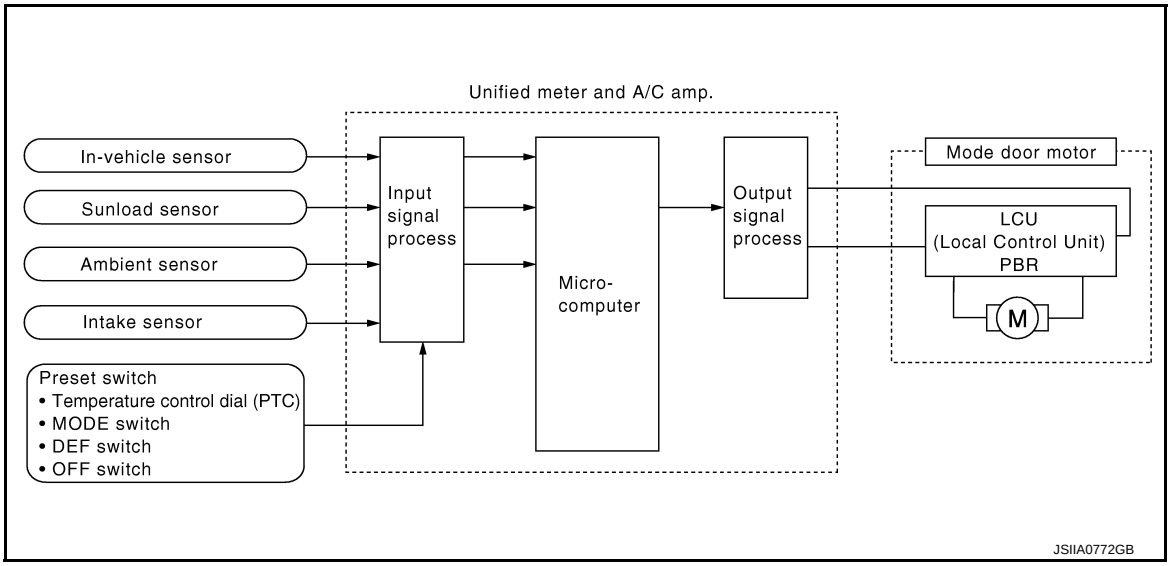

System Description

INFOID:0000000003894091

The mode door is automatically controlled by the temperature setting, ambient temperature, in-vehicle temperature, intake temperature and amount of sunload.

SYSTEM OPERATION

- The unified meter and A/C amp. receives data from each of the sensors.
- The unified meter and A/C amp. sends air mix door, mode door and intake door opening angle data to the air mix door motor LCUs, mode door motor LCU and intake door motor LCU.
- The air mix door motors, mode door motor and intake door motor read their respective signals according to the address signal. Opening angle indication signals received from the unified meter and A/C amp. and each of the motor position sensors are compared by the LCUs in each door motor with the existing decision and opening angles.
- Subsequently, HOT/COLD, DEF/VENT and FRE/REC operation is selected. The new selection data are returned to the unified meter and A/C amp.

Door Motor Circuit

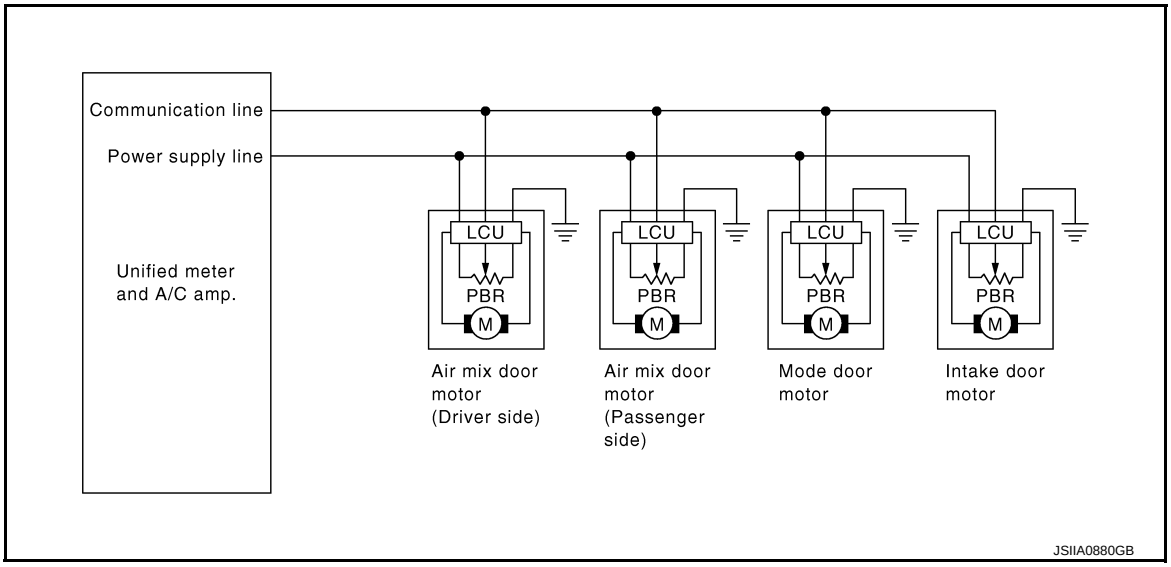

Mode Door Control Specification

Mode position can be selected manually by pressing MODE switch or DEF switch of the preset switch. This enables to fix a mode position. Automatic control by unified meter and A/C amp. Pressing AUTO switch allows automatic control by unified meter and A/C amp. During the automatic control of mode position, a mode door position (VENT, B/L, FOOT, or D/F) is selected based on a target air mix door opening angle and sunload depending on a temperature calculated by unified meter and A/C amp. In addition, D/F is selected to prevent windshield fogging only when ambient temperature is extremely low with mode position FOOT.

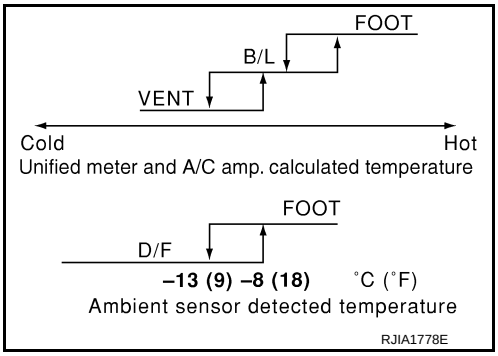

AIR MIX DOOR CONTROL SYSTEM

System Diagram

INFOID:0000000003894094

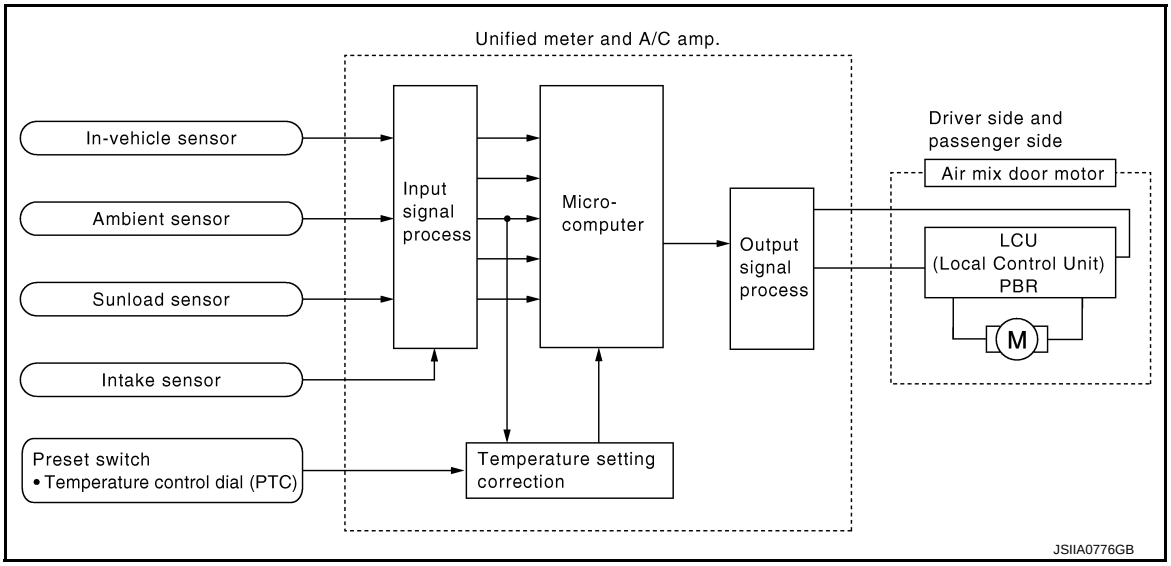

System Description

INFOID:0000000003894095

The air mix doors are automatically controlled so that in-vehicle temperature is maintained at a predetermined value by the temperature setting, ambient temperature, in-vehicle temperature and amount of sunload.

SYSTEM OPERATION

- The unified meter and A/C amp. receives data from each of the sensors. The unified meter and A/C amp. sends air mix doors, mode door and intake door opening angle data to the air mix door motor LCUs, mode door motor LCU and intake door motor LCU.
- The air mix door motors, mode door motor and intake door motor read their respective signals according to the address signal. Opening angle indication signals received from the unified meter and A/C amp. and each of the motor position sensors are compared by the LCUs in each door motor with the existing decision and opening angles. Subsequently, HOT/COLD, DEF/VENT and FRE/REC operation is selected. The new selection data are returned to the unified meter and A/C amp.

Door Motor Circuit

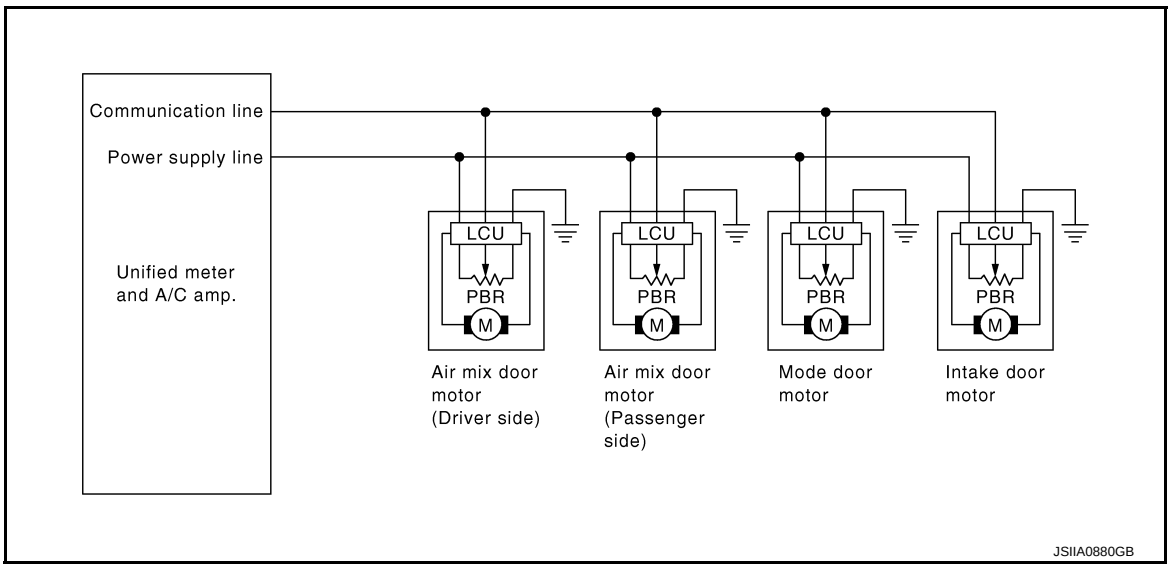

Air Mix Door Control Specification

When ignition switch is ON, unified meter and A/C amp. continuously and automatically controls temperatures regardless of air conditioner operational condition. When setting a target temperature with temperature control dial, unified meter and A/C amp. corrects the set temperature and decides a target air mix door opening angle. Unified meter and A/C amp. controls air mix door according to the target air mix door opening angle and current air mix door opening angle for keeping an optimum air mix door opening angle. When a temperature is set at 18.0°C (60°F), air mix door is fixed at full cold, and when a temperature is set at 32.0°C (90°F), it is set at full hot.

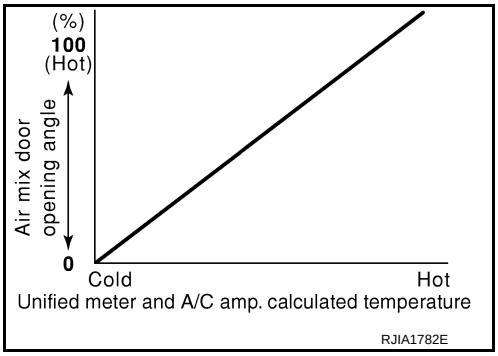

Potentio Temperature Control (PTC)

The PTC (1) is built into the preset switch. It can be set at an interval of 0.5°C (1.0°F) in the 18.0°C (60°F) to 32.0°C (90°F) temperature range by turning temperature control dial. The set temperature is displayed.

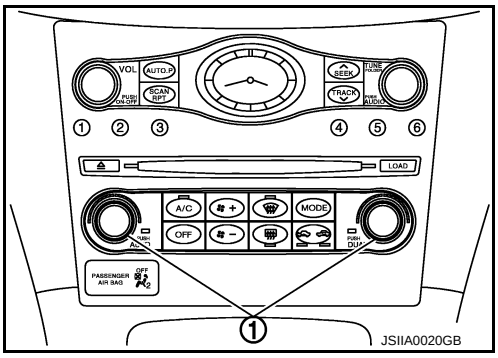

INTAKE DOOR CONTROL SYSTEM
WITHOUT ACCS

WITHOUT ACCS : System Diagram

INFOID:0000000003894096

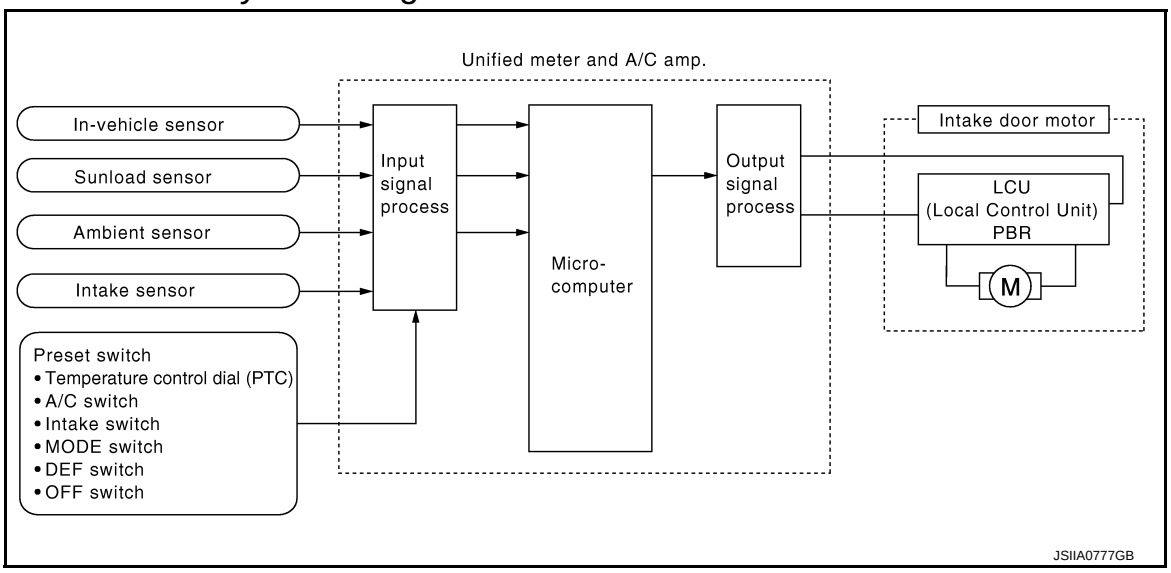

WITHOUT ACCS : System Description

INFOID:0000000003894097

The intake doors are automatically controlled by the temperature setting, ambient temperature, in-vehicle temperature, intake temperature, amount of sunload and ON/OFF operation of the compressor.

SYSTEM OPERATION

The intake door control judges intake door position based on the ambient temperature, the intake air temperature and the in-vehicle temperature. When shifting mode position D/F, when the DEF or OFF switches are pressed, or when A/C switch is OFF, the unified meter and A/C amp. sets the intake door at the FRE position.

Door Motor Circuit

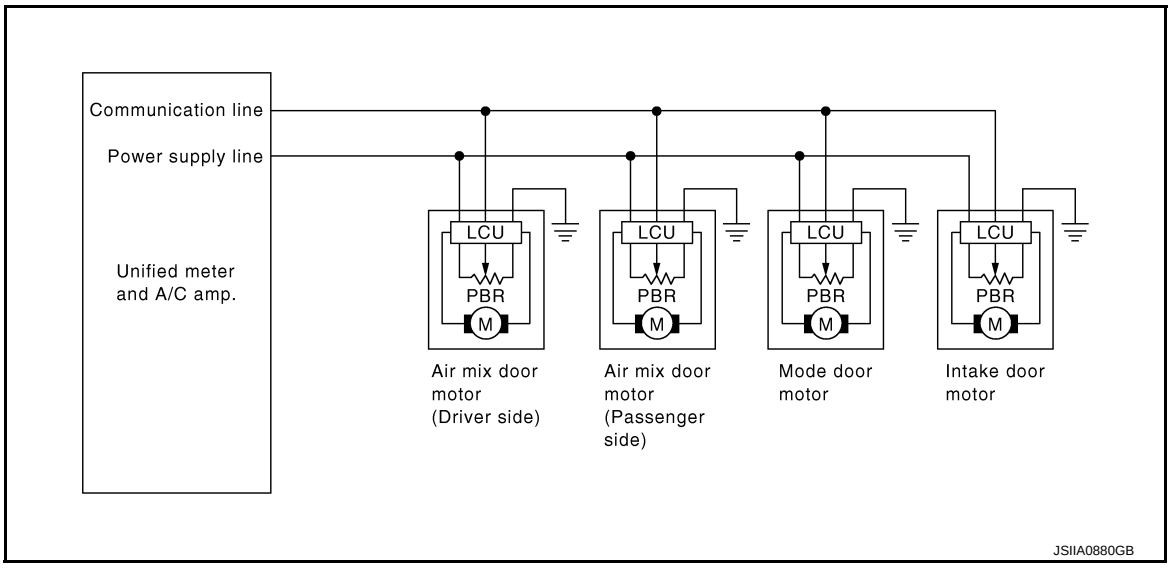

Intake Door Control Specification

- Intake door position is basically fixed at FRE when FRE indicator of intake switch is ON or DEF switch is ON.
- Intake door position is basically fixed at REC when REC indicator of intake switch is ON.
- Intake door automatic control selects FRE, 20 - 80%FRE, or REC depending on a target air mix door opening angle, based on in-vehicle temperature, ambient temperature, and sunload.

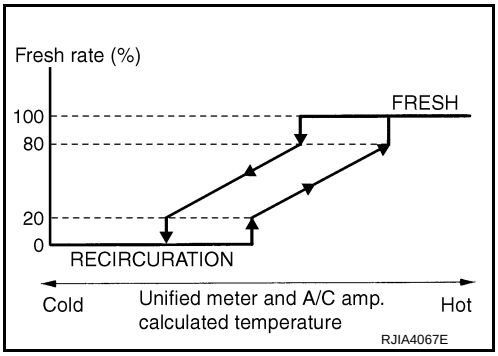

WITH ACCS

WITH ACCS : System Diagram

INFOID:0000000003941439

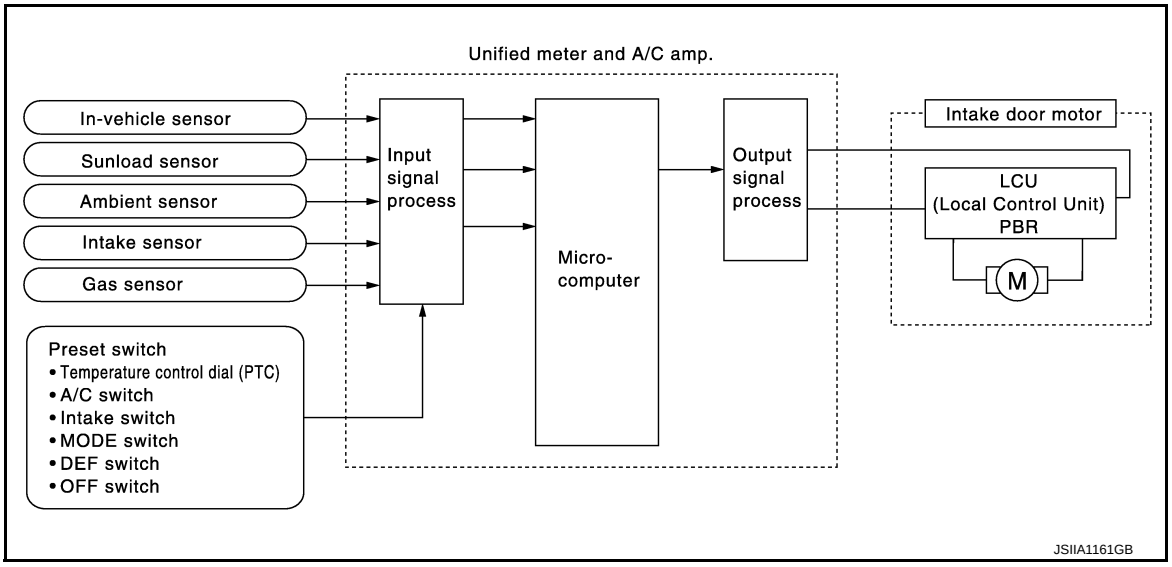

WITH ACCS : System Description

INFOID:0000000003941440

The intake doors are automatically controlled by the ambient atmospheric CO and NO_2, temperature setting, ambient temperature, in-vehicle temperature, intake temperature, amount of sunload and ON/OFF operation of the compressor.

SYSTEM OPERATION

The intake door control judges intake door position based on the ambient atmospheric CO and NO_2, ambient temperature, the intake air temperature and the in-vehicle temperature. When DEF or OFF switches are pressed, the unified meter and A/C amp. sets the intake door at the FRE position.

Door Motor Circuit

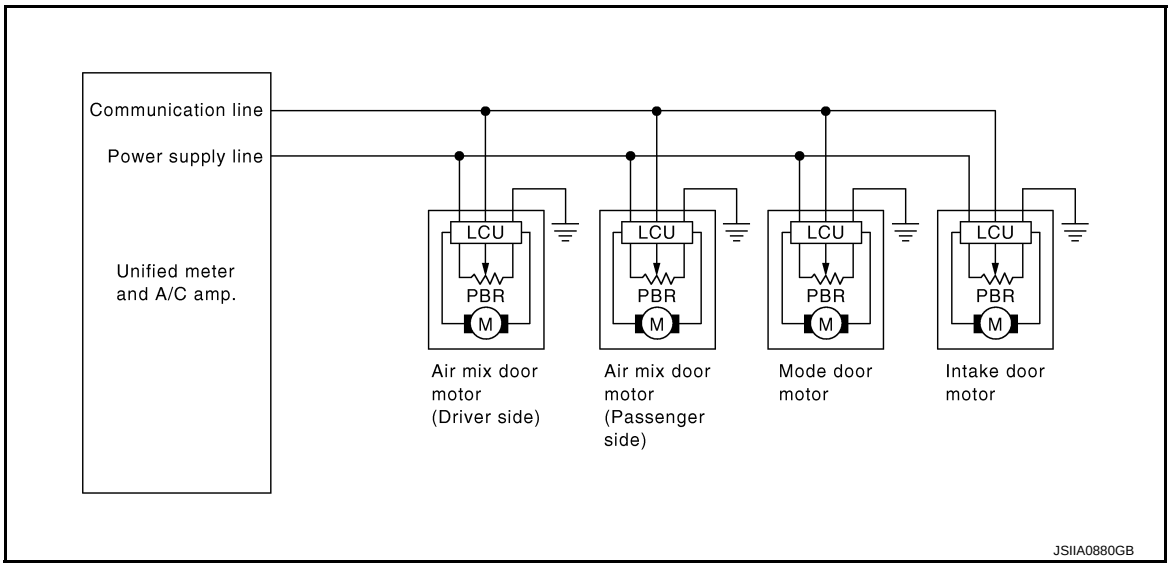

Intake Door Control Specification

- Intake door position is basically fixed at FRE when REC indicator of intake switch is OFF or DEF switch is ON.
- Intake door position is basically fixed at REC when REC indicator of intake switch is ON.
- Intake door automatic control selects FRE, 20 - 80%FRE, or REC depending on a target air mix door opening angle, based on in-vehicle temperature, ambient temperature, and sunload.

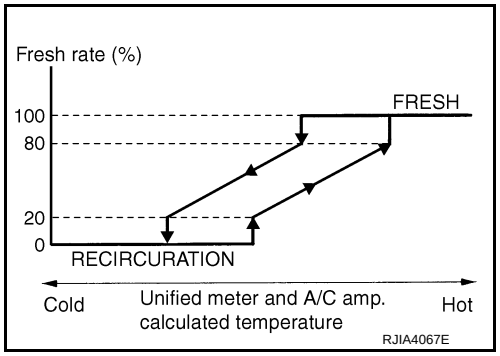

Auto Intake Control System

In addition to the regular automatic control, intake door condition is controlled by gas sensor output signal when auto intake mode is selected. This system automatically controls the inlet to prevent a smell of exhaust gas from getting into vehicle by receiving signals from the gas sensor that detects ambient atmospheric CO and NO_2.

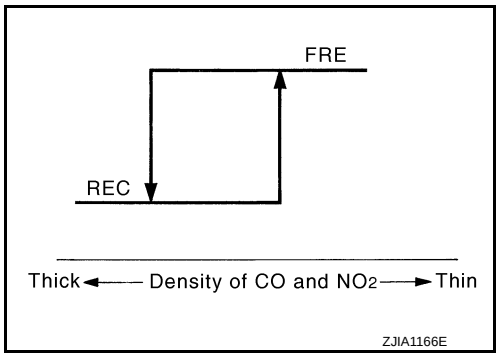

BLOWER MOTOR CONTROL SYSTEM

System Diagram

INFOID:0000000003894100

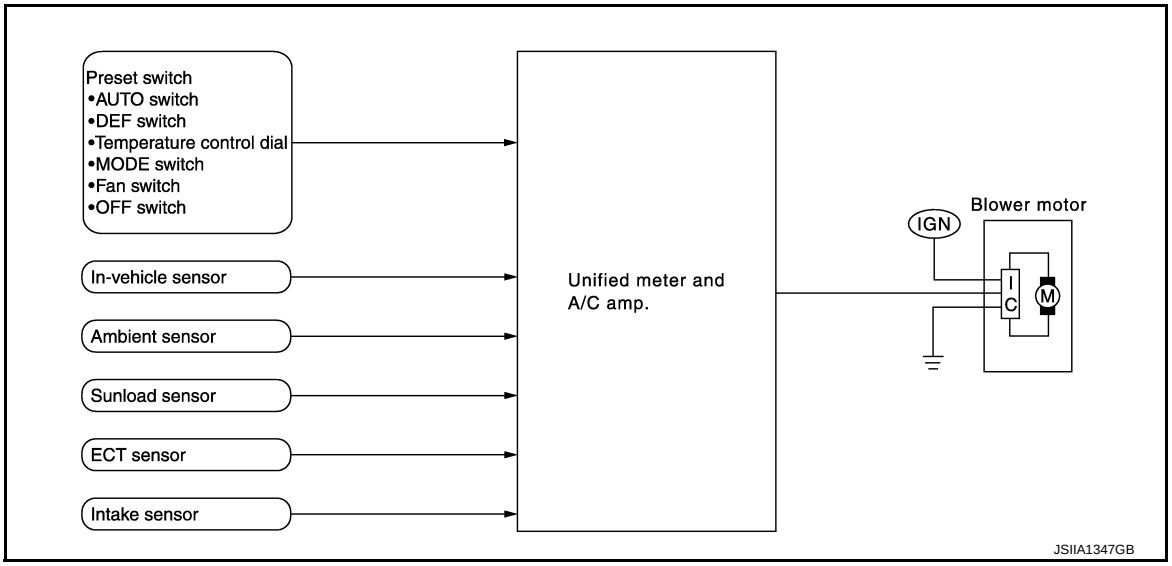

System Description

INFOID:0000000003894101

Blower speed is automatically controlled by the temperature setting, ambient temperature, in-vehicle temperature, intake temperature, amount of sunload and air mix door position.
With pressing AUTO switch, the blower motor starts to gradually increase air flow volume.
When engine coolant temperature is low, the blower motor operation is delayed to prevent cool air from flowing.

SYSTEM OPERATION

Automatic Mode
In the automatic mode, the blower motor speed is calculated by the unified meter and A/C amp. based on the input from the PBR, in-vehicle sensor, sunload sensor, intake sensor and ambient sensor.
When the air flow is increased, the duty ratio of the blower motor control signal is changed at 8%/sec. to prevent a sudden increase in air flow.
In addition to manual air flow control and the usual automatic air flow control, starting air flow control, low water temperature starting control and high passenger compartment temperature starting control are available.

Starting Fan Speed Control
Start up from COLD SOAK Condition (Automatic mode)
In a cold start up condition where the engine coolant temperature is below 56°C (133°F), the blower does not operate for a short period of time (up to 150 seconds). The exact start delay time varies depending on the ambient and engine coolant temperature.
In the most extreme case (very low ambient) the blower start delay is 150 seconds as described above. After this delay, the blower will operate at low speed until the engine coolant temperature rises above 56°C (133°F), and then the blower speed increases to the objective speed.
Start up from usual or HOT SOAK Condition (Automatic mode)
The blower will begin operation momentarily after the AUTO switch is pressed. The blower speed rises gradually to the objective speed over a time period of 3 seconds or less (actual time depends on the objective blower speed).

Blower Speed Compensation
Sunload
When the in-vehicle temperature and the set temperature are very close, the blower operates at low speed. The low speed varies depending on the sunload. During conditions of low or no sunload, the blower speed is at duty ratio 25%. During high sunload conditions, the unified meter and A/C amp. raise the blower speed (duty ratio 49%).

Fan Speed Control Specification

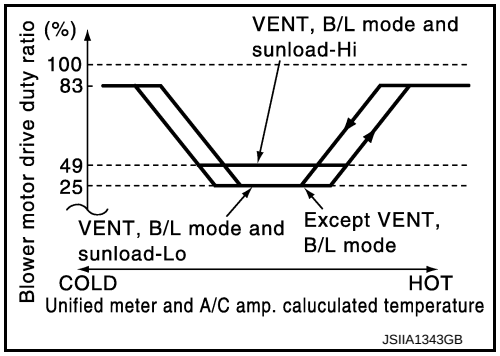

MAGNET CLUTCH CONTROL SYSTEM

System Diagram

INFOID:0000000003894102

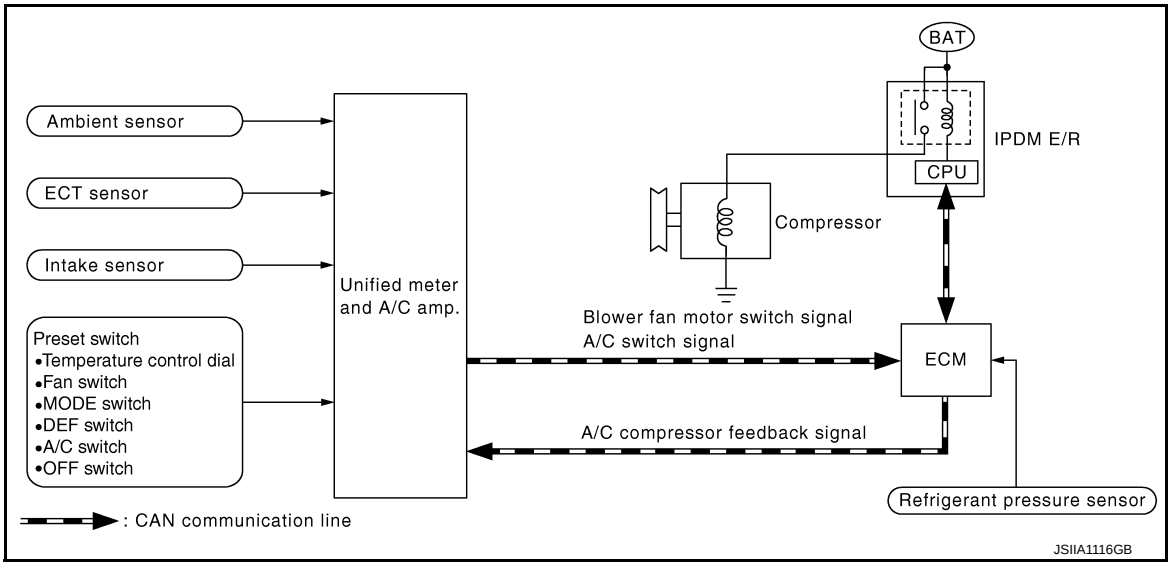

System Description

INFOID:0000000003894103

Unified meter and A/C amp. controls compressor operation by ambient temperature, intake air temperature and signal from ECM.

SYSTEM OPERATION

When A/C switch, AUTO switch, DEF switch is pressed or when shifting mode position D/F, unified meter and A/C amp. transmits A/C switch signal and blower fan motor switch signal to ECM, via CAN communication.
ECM judges whether compressor can be turned ON, based on each sensor status (refrigerant-pressure sensor signal, throttle angle, etc.). If it judges compressor can be turned ON, it sends A/C compressor request signal to IPDM E/R, via CAN communication.
Upon receipt of A/C compressor request signal from ECM, IPDM E/R turns A/C relay ON to operate compressor.
When sending A/C compressor request signal to IPDM E/R via CAN communication line, ECM simultaneously sends A/C compressor feedback signal to unified meter and A/C amp. via CAN communication line.
ECM sends A/C compressor feedback signal to unified meter and A/C amp., then, uses input A/C compressor feedback signal to control air inlet.

Compressor Protection Control

ECM makes the A/C relay go OFF and stops the compressor when pressure on the high-pressure side detected by refrigerant pressure sensor is over approximately 3,119 kPa (31.8 kg/cm^2, 452 psi), or below approximately 118 kPa (1.2 kg/cm^2, 17 psi).

Low Temperature Protection Control

Unified meter and A/C amp. turns compressor ON or OFF as judged by a signal detected by ambient sensor and intake sensor.
When ambient temperature is higher than –2°C (28°F), the compressor turns ON. The compressor turns OFF when ambient temperature is lower than –5°C (23°F).

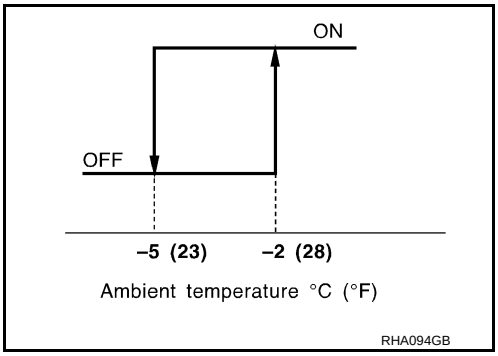

When intake air temperature is higher than 1°C (34°F), the compressor turns ON. The compressor turns OFF when intake air temperature is lower than –5°C (23°F).

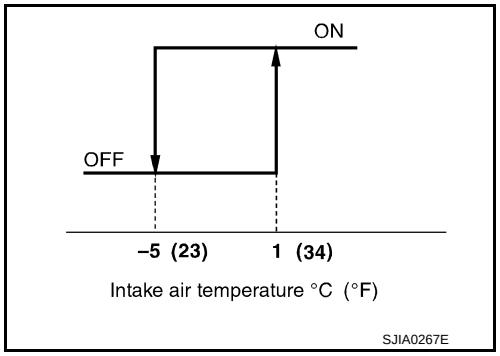

DIAGNOSIS SYSTEM (UNIFIED METER & A/C AMP.)
WITHOUT ACCS

WITHOUT ACCS : Diagnosis Description

INFOID:0000000003894106

SELF-DIAGNOSIS SYSTEM

The self-diagnosis system is built into the unified meter and A/C amp. to quickly locate the cause of malfunctions.

SELF-DIAGNOSIS FUNCTION

- The self-diagnosis system diagnoses sensors, door motors, blower motor, etc. by system line. Refer to applicable sections (items) for details. Shifting from normal control to the self-diagnosis system is accomplished by starting the engine (turning the ignition switch ON) and pressing OFF switch for at least 5 seconds. The OFF switch must be pressed within 10 seconds after starting the engine (ignition switch is turned ON). This system is canceled by either pressing AUTO switch or turning the ignition switch OFF. Shifting from one step is accomplished by means of turning temperature control dial (driver side), as required.
- Shifting from STEP-5 to AUXILIARY MECHANISM is accomplished by means of pressing fan (UP: +) switch.

- Temperature setting trimmer. Refer to HAC-6, "WITHOUT ACCS : Temperature Setting Trimmer".
- Foot position setting trimmer. Refer to HAC-7, "WITHOUT ACCS : Foot Position Setting Trimmer".

- Inlet port memory function. Refer to HAC-8, "WITHOUT ACCS : Inlet Port Memory Function".

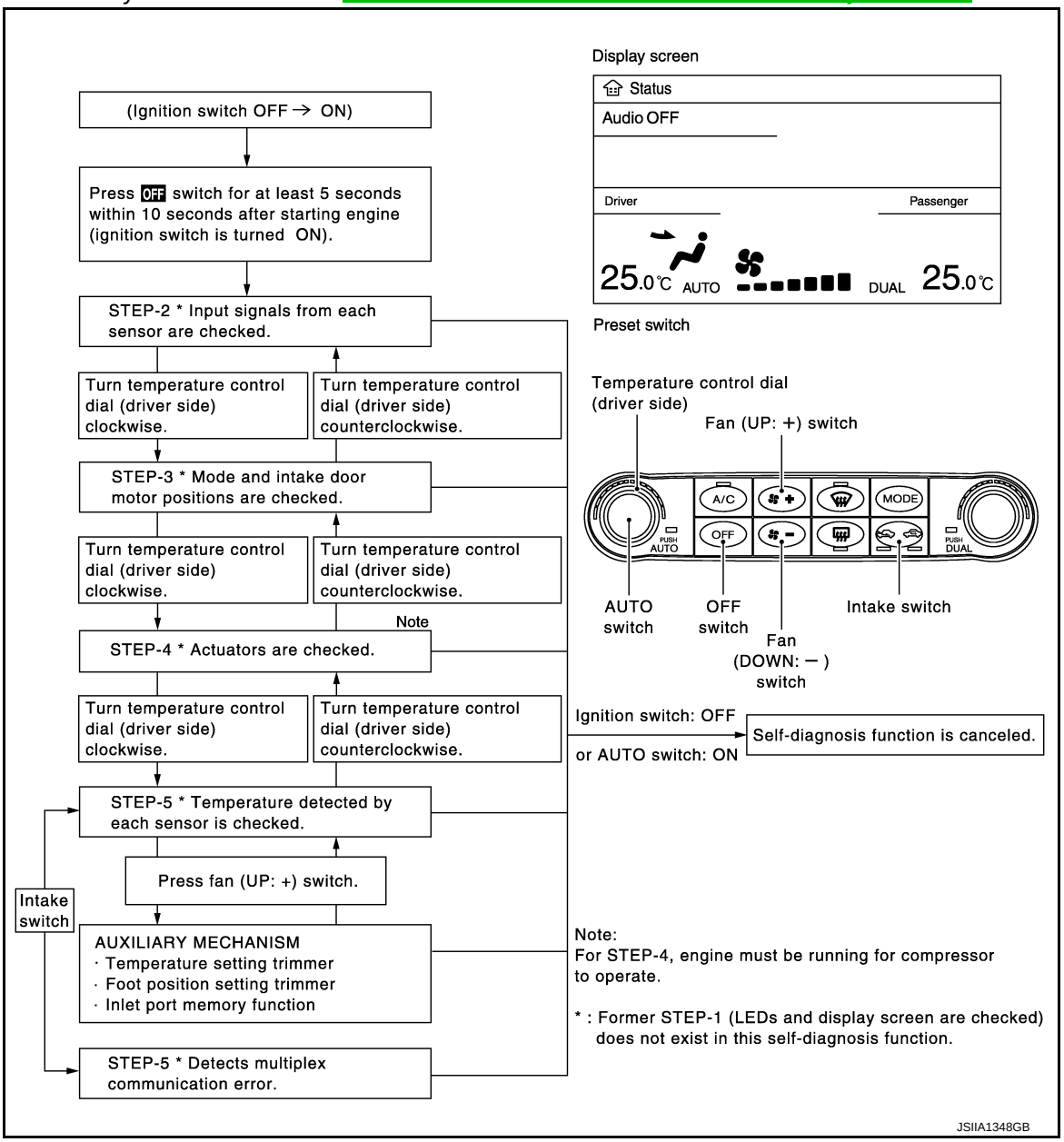

CONFORMATION METHOD

1. SET IN SELF-DIAGNOSIS MODE

1. Turn ignition switch ON.
2. Set in self-diagnosis mode as per the following. Press OFF switch for at least 5 seconds Within 10 seconds after starting engine (ignition switch is turned ON).

NOTE:

- If battery voltage drops below 12 V during diagnosis STEP-3, door motor speed becomes slower and as a result, the system may generate an error even when operation is normal. Start engine before performing this diagnosis to avoid this.
- Former STEP-1 (indicators and display screen are checked) does not exist in this self-diagnosis function.
- OFF switch may not be recognized according to the timing of pressing it. Operate OFF switch after the intake switch indicators are turned ON.

>> GO TO 2.

2. STEP-2: SENSOR AND DOOR MOTOR CIRCUITS ARE CHECKED FOR OPEN OR SHORT CIRCUIT

Does code No. 20 appear on the display?

YES >> GO TO 3.
NO >> GO TO 11.

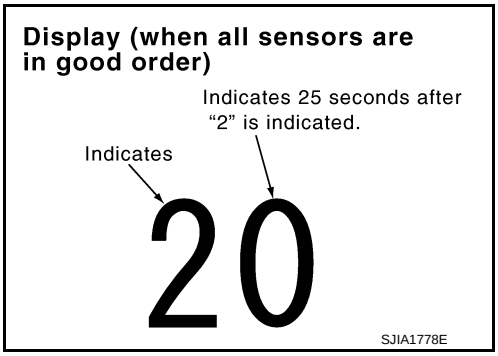

3. STEP-3: MODE DOOR AND INTAKE DOOR POSITIONS ARE CHECKED

Turn temperature control dial (driver side) clockwise.

Does code No. 30 appear on the display?

YES >> GO TO 4.
NO >> GO TO 12.

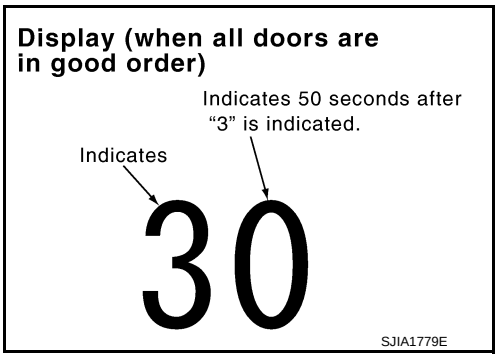

4. STEP-4: OPERATION OF EACH DOOR MOTOR IS CHECKED

1. Turn temperature control dial (driver side) clockwise.
2. Press DEF ( ) switch. Code No. of each door motor test is indicated on the display.

>> GO TO 5.

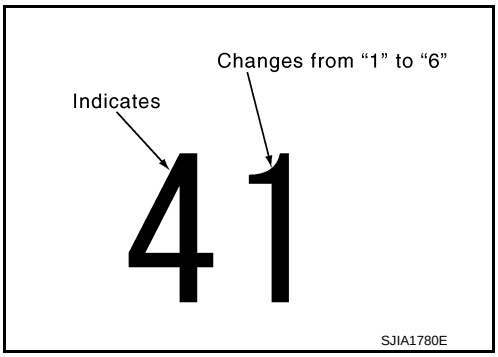

5. CHECK ACTUATORS

Refer to the following chart and check discharge air flow, air temperature, blower motor duty ratio and compressor operation.

Code No.	41	42	43	44	45	46
Mode door position	VENT	B/L 1	B/L 2	FOOT	D/F	DEF
Intake door position	REC	REC	20% FRE	FRE	FRE	FRE
Air mix door position	FULL COOL	FULL COOL	FULL HOT	FULL HOT	FULL HOT	FULL HOT
Blower motor duty ratio	37%	91%	65%	65%	65%	91%
Compressor (Magnet clutch)	ON	ON	OFF	OFF	ON	ON
Electronic control valve (ECV) duty ratio	100%	100%	0%	0%	50%	100%

Checks must be made visually, by listening the sound, or by touching air outlets with hand, etc. for improper operation.

Discharge air flow						
Mode position indication	Condition	Air outlet/distribution				
		VENT		FOOT		DEF
		Front	Rear	Front	Rear	
	DUAL switch: OFF Rear ventilator : OPEN	89%	11%	—	—	—
		45%	11%	26%	18%	—
		13%	11%	32%	19%	25%
		10%	10%	28%	17%	35%
		17%	—	—	—	83%

JSIIA1208GB

Is this inspection result normal?

YES >> GO TO 6.
NO-1 >> Air outlet does not change. Refer to HAC-71, "Diagnosis Procedure".
NO-2 >> Intake door does not change. Refer to HAC-77, "WITHOUT ACCS : Diagnosis Procedure".
NO-3 >> Discharge air temperature (driver side) does not change. Refer to HAC-73, "Diagnosis Procedure".
NO-4 >> Discharge air temperature (passenger side) does not change. Refer to HAC-75, "Diagnosis Procedure".
NO-5 >> Blower motor operation is malfunctioning. Refer to HAC-81, "Diagnosis Procedure".
NO-6 >> Magnet clutch does not engage. Refer to HAC-85, "Diagnosis Procedure".

6. STEP-5: TEMPERATURE OF EACH SENSOR IS CHECKED

1. Turn temperature control dial (driver side) clockwise.
2. Code No. 51 appears on the display.

>> GO TO 7.

7. CHECK AMBIENT SENSOR

Press DEF ( ) switch one time. Temperature detected by ambient sensor is indicated on the display.

NOTE:
Check sensor circuit first if the temperature indicated on the display greatly differs from the actual temperature, and then check sensor.

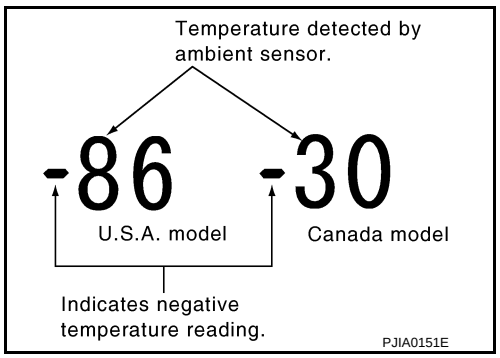

Is this inspection result normal?

YES >> GO TO 8.
NO >> Go to Ambient Sensor Circuit. Refer to HAC-89, "Diagnosis Procedure".

8. CHECK IN-VEHICLE SENSOR

Press DEF ( ) switch for the second time. Temperature detected by in-vehicle sensor is indicated on the display.

NOTE:

Check sensor circuit first if the temperature indicated on the display greatly differs from the actual temperature, and then check sensor.

Is this inspection result normal?

YES >> GO TO 9.
NO >> Go to In-vehicle Sensor Circuit. Refer to HAC-93, "Diagnosis Procedure".

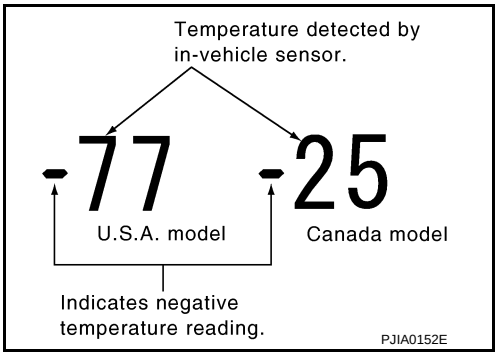

9. CHECK INTAKE SENSOR

Press DEF ( ) switch for the third time. Temperature detected by intake sensor is indicated on the display.

NOTE:

Check sensor circuit first if the temperature indicated on the display greatly differs from the actual temperature, and then check sensor.

Is this inspection result normal?

YES >> GO TO 10.
NO >> Go to Intake Sensor Circuit. Refer to HAC-98, "Diagnosis Procedure".

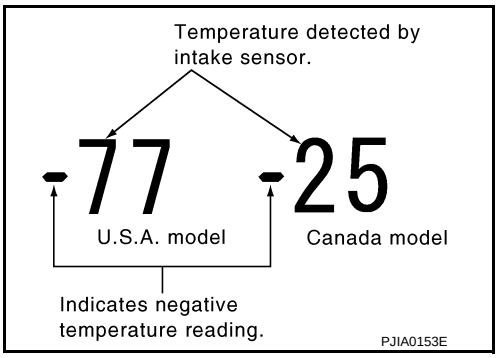

10. CHECK CAN COMMUNICATION ERROR

1. Press intake switch.
2. CAN communication error between each unit that uses the unified meter and A/C amp. can be detected as self-diagnosis results. (The display of each error will blink twice for 0.5 second intervals if plural errors occur.)

Is the inspection result normal?

YES >> INSPECTION END
NO >> Go to CAN communication (Unified meter and A/C amp. – AV control unit). Refer to MWI-49, "Diagnosis Procedure".

Display	CAN communication error
52	In good order
52	AV C/U ⇨ Unified meter and A/C amp.
52	Unified meter and A/C amp. ⇨ All unit

JSIIA0138GB

11. CHECK MALFUNCTIONING SENSOR AND DOOR MOTOR

Refer to the following chart for malfunctioning code No.
(Corresponding code Nos. indicates 1 second each if two or more sensors and door motors malfunction.)
(Corresponding code Nos. indicates 0.5 second each if two door motors malfunction.)

Code No.	Malfunctioning sensor and door motor (Including circuits)	Reference
21 / –21	Ambient sensor	HAC-89, "Diagnosis Procedure"
22 / –22	In-vehicle sensor	HAC-93, "Diagnosis Procedure"
24 / –24	Intake sensor	HAC-98, "Diagnosis Procedure"
25 / –25	Sunload sensor *	HAC-95, "Diagnosis Procedure"
26 / –26	Air mix door motor PBR (Driver side)	HAC-73, "Diagnosis Procedure"
27 / –27	Air mix door motor PBR (Passenger side)	HAC-75, "Diagnosis Procedure"

*: Perform self-diagnosis STEP-2 under sunshine.

When performing indoors, aim a light (more than 60 W) at sunload sensor, otherwise code No. 25 indicates despite that sunload sensor is functioning normally.

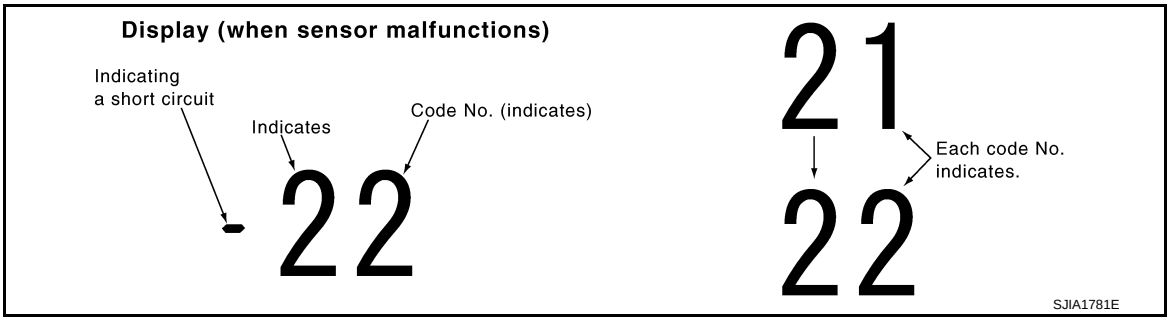

>> INSPECTION END

12. CHECK MALFUNCTIONING DOOR MOTOR POSITION SWITCH

Mode and/or intake door motor PBR(s) is/are malfunctioning.

Code No. *1 *2	Mode or intake door position		Reference
31	VENT	Mode door motor	HAC-71, "Diagnosis Procedure"
32	DEF		
37	FRE	Intake door motor	HAC-77, "WITHOUT ACCS : Diagnosis Procedure"
38	20% FRE		
39	REC		

(Corresponding code Nos. indicates 1 second each if two or more mode or intake door motors malfunction.)
*1: The following display pattern will appear if mode door motor harness connector is disconnected.
31→32→Return to 31
*2: The following display pattern will appear if intake door motor harness connector is disconnected.
37→38→39→Return to 37

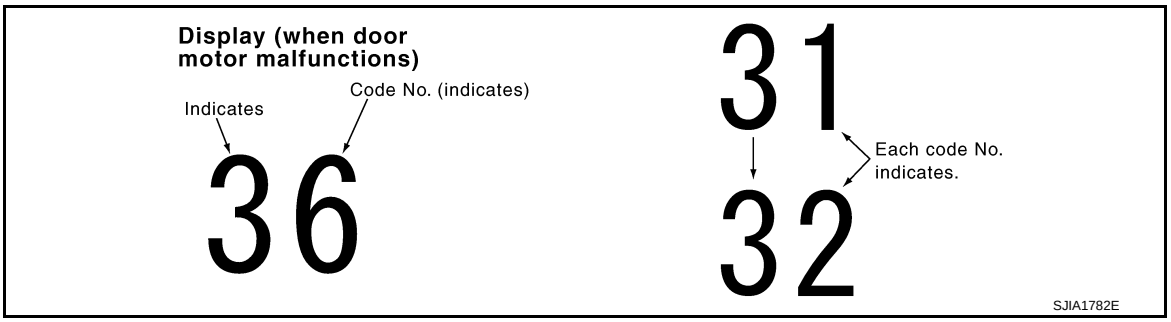

>> INSPECTION END

WITHOUT ACCS : CONSULT-III Function

INFOID:0000000003894105

CONSULT-III APPLICATION ITEMS

CONSULT-III can display each diagnosis item using the diagnosis test modes shown as per the following.

System part	Check item, diagnosis mode	Description
ECM	Data monitor	Displays ECM input data in real time.

DATA MONITOR

Display Item List

Monitor Item	Condition	Value/Status
IGNITION SW	Ignition switch OFF → ON	Off → On

Monitor Item	Condition		Value/Status
HEATER FAN SW	Ignition switch ON	Blower fan motor switch ON	On
		Blower fan motor switch OFF	Off
AIR COND SIG	Ignition switch ON	Compressor ON	On
		Compressor OFF	Off
REFRIGERANT PRESSURE SENSOR	• Engine is running • Warm-up condition • Both A/C switch and blower fan motor switch: ON (Compressor operates)		1.0 – 4.0 V

WITH ACCS

WITH ACCS : Diagnosis Description

INFOID:0000000003941441

SELF-DIAGNOSIS SYSTEM

The self-diagnosis system is built into the unified meter and A/C amp. to quickly locate the cause of malfunctions.

SELF-DIAGNOSIS FUNCTION

- The self-diagnosis system diagnoses sensors, door motors, blower motor, etc. by system line. Refer to applicable sections (items) for details. Shifting from normal control to the self-diagnosis system is accomplished by starting the engine (turning the ignition switch ON) and pressing OFF switch for at least 5 seconds. The OFF switch must be pressed within 10 seconds after starting the engine (ignition switch is turned ON). This system is canceled by either pressing AUTO switch or turning the ignition switch OFF. Shifting from one step is accomplished by means of turning temperature control dial (driver side), as required.
- Shifting from STEP-5 to AUXILIARY MECHANISM is accomplished by means of pressing fan (UP: +) switch.

- Temperature setting trimmer. Refer to HAC-11, "WITH ACCS : Temperature Setting Trimmer".
- Foot position setting trimmer. Refer to HAC-12, "WITH ACCS : Foot Position Setting Trimmer".
- Inlet port memory function. Refer to HAC-12, "WITH ACCS : Inlet Port Memory Function".
- Gas sensor sensitivity adjustment function. Refer to HAC-12, "WITH ACCS : Gas Sensor Sensitivity Adjustment Function".

- Auto intake interlocking movement change function. Refer to HAC-13, "WITH ACCS : Auto Intake Interlocking Movement Change Function".

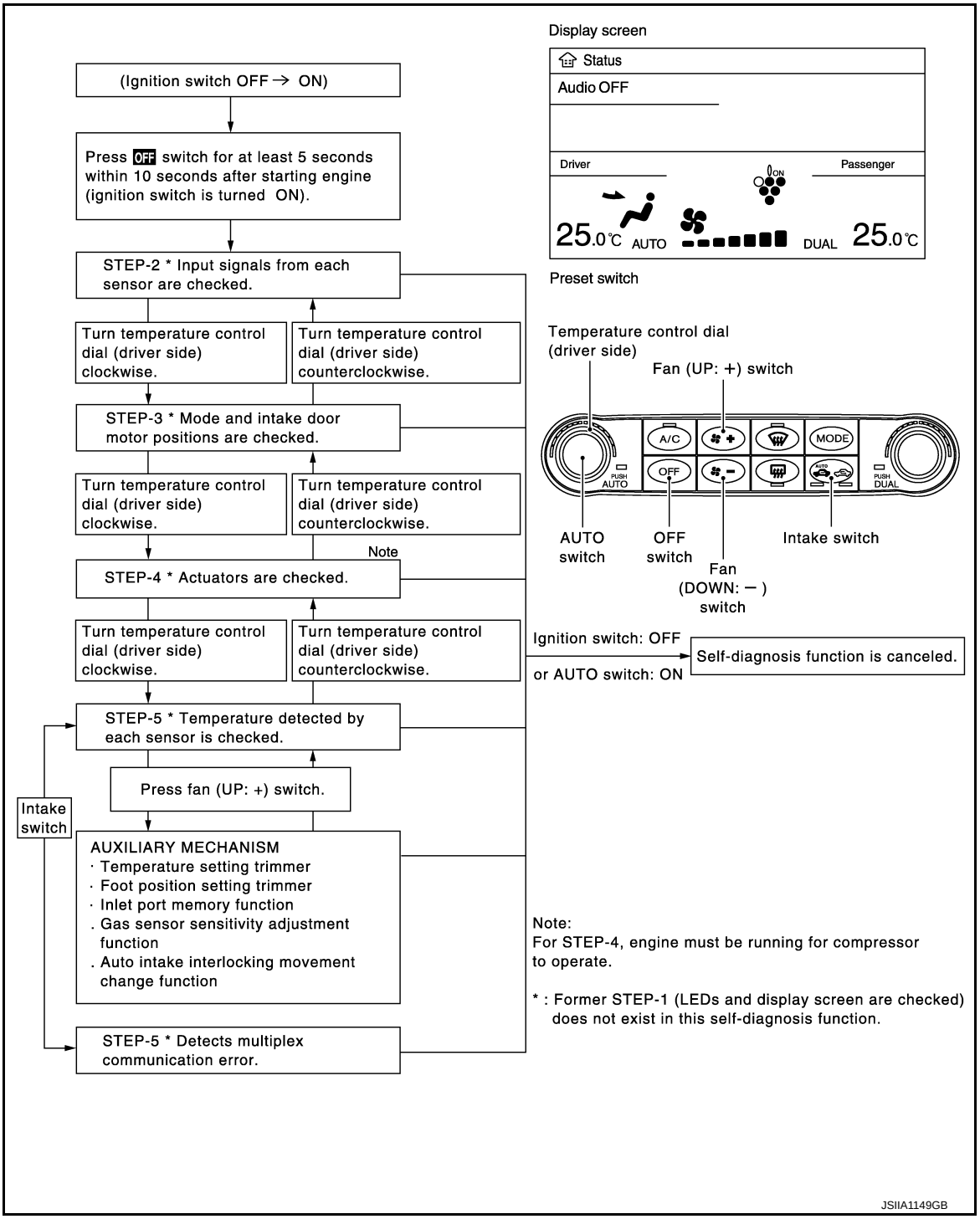

CONFORMATION METHOD

1. SET IN SELF-DIAGNOSIS MODE

1. Turn ignition switch ON.
2. Set in self-diagnosis mode as per the following. Press OFF switch for at least 5 seconds Within 10 seconds after starting engine (ignition switch is turned ON).

NOTE:

- If battery voltage drops below 12 V during diagnosis STEP-3, door motor speed becomes slower and as a result, the system may generate an error even when operation is normal. Start engine before performing this diagnosis to avoid this.
- Former STEP-1 (indicators and display screen are checked) does not exist in this self-diagnosis function.

- OFF switch may not be recognized according to the timing of pressing it. Operate OFF switch after the intake switch indicators are turned ON.

>> GO TO 2.

2. STEP-2: SENSOR AND DOOR MOTOR CIRCUITS ARE CHECKED FOR OPEN OR SHORT CIRCUIT

Does code No. 20 appear on the display?

YES >> GO TO 3.
NO >> GO TO 11.

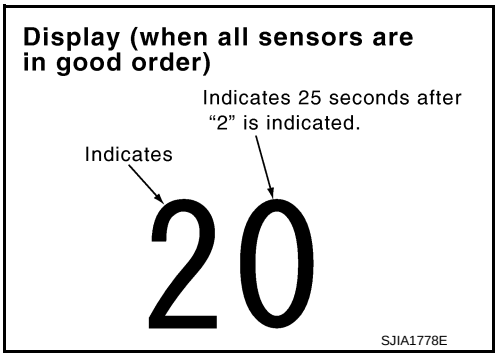

3. STEP-3: MODE DOOR AND INTAKE DOOR POSITIONS ARE CHECKED

Turn temperature control dial (driver side) clockwise.

Does code No. 30 appear on the display?

YES >> GO TO 4.
NO >> GO TO 12.

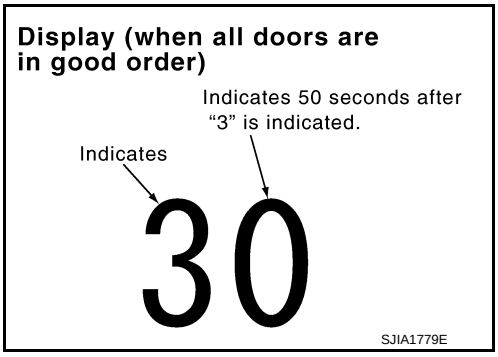

4. STEP-4: OPERATION OF EACH DOOR MOTOR IS CHECKED

1. Turn temperature control dial (driver side) clockwise.
2. Press DEF ( ) switch. Code No. of each door motor test is indicated on the display.

>> GO TO 5.

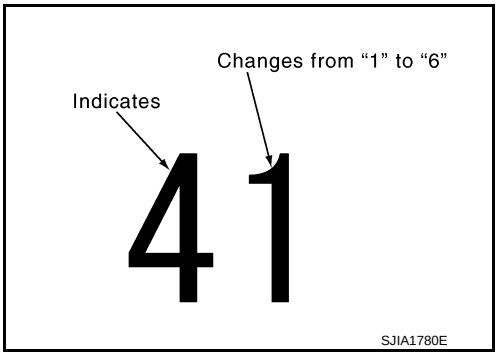

5. CHECK ACTUATORS

Refer to the following chart and check discharge air flow, air temperature, blower motor duty ratio and compressor operation.

Code No.	41	42	43	44	45	46
Mode door position	VENT	B/L 1	B/L 2	FOOT	D/F	DEF
Intake door position	REC	REC	20% FRE	FRE	FRE	FRE
Air mix door position	FULL COOL	FULL COOL	FULL HOT	FULL HOT	FULL HOT	FULL HOT
Blower motor duty ratio	37%	91%	65%	65%	65%	91%
Compressor (Magnet clutch)	ON	ON	OFF	OFF	ON	ON
Electronic control valve (ECV) duty ratio	100%	100%	0%	0%	50%	100%

Code No.	41	42	43	44	45	46
Ionizer	ON	ON	ON	ON	ON	OFF
Ion mode	ION	ION	CLEAN	CLEAN	ION	OFF

Checks must be made visually, by listening the sound, or by touching air outlets with hand, etc. for improper operation.

Discharge air flow						
Mode position indication	Condition	Air outlet/distribution				
		VENT		FOOT		DEF
		Front	Rear	Front	Rear	
	DUAL switch: OFF Rear ventilator : OPEN	89%	11%	—	—	—
		45%	11%	26%	18%	—
		13%	11%	32%	19%	25%
		10%	10%	28%	17%	35%
		17%	—	—	—	83%

JSIIA1208GB

Is this inspection result normal?

YES >> GO TO 6.
NO-1 >> Air outlet does not change. Refer to HAC-71, "Diagnosis Procedure".
NO-2 >> Intake door does not change. Refer to HAC-79, "WITH ACCS : Diagnosis Procedure".
NO-3 >> Discharge air temperature (driver side) does not change. Refer to HAC-73, "Diagnosis Procedure".
NO-4 >> Discharge air temperature (passenger side) does not change. Refer to HAC-75, "Diagnosis Procedure".
NO-5 >> Blower motor operation is malfunctioning. Refer to HAC-81, "Diagnosis Procedure".
NO-6 >> Magnet clutch does not engage. Refer to HAC-85, "Diagnosis Procedure".
NO-7 >> Plasmacluster system does not operate. Refer to HAC-162, "Inspection procedure".

6. STEP-5: TEMPERATURE OF EACH SENSOR IS CHECKED

1. Turn temperature control dial (driver side) clockwise.
2. Code No. 51 appears on the display.

>> GO TO 7.

7. CHECK AMBIENT SENSOR

Press DEF ( ) switch one time. Temperature detected by ambient sensor is indicated on the display.

NOTE:
Check sensor circuit first if the temperature indicated on the display greatly differs from the actual temperature, and then check sensor.

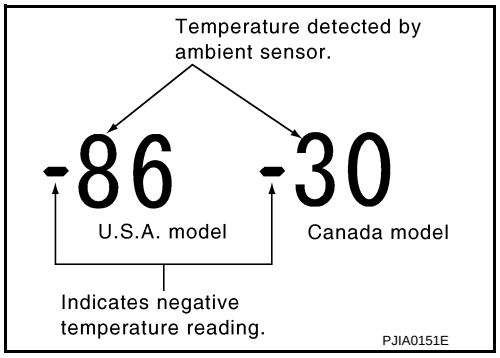

Is this inspection result normal?

YES >> GO TO 8.
NO >> Go to Ambient Sensor Circuit. Refer to HAC-89, "Diagnosis Procedure".

8. CHECK IN-VEHICLE SENSOR

Press DEF ( ) switch for the second time. Temperature detected by in-vehicle sensor is indicated on the display.

NOTE:

Check sensor circuit first if the temperature indicated on the display greatly differs from the actual temperature, and then check sensor.

Is this inspection result normal?

YES >> GO TO 9.
NO >> Go to In-vehicle Sensor Circuit. Refer to HAC-93, "Diagnosis Procedure".

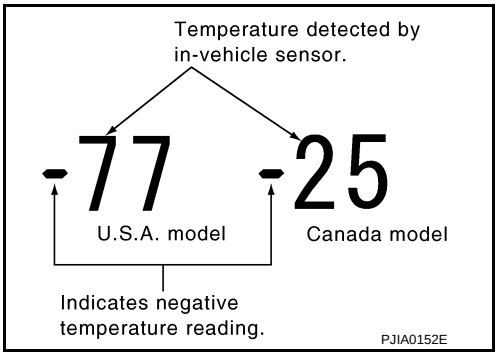

9. CHECK INTAKE SENSOR

Press DEF ( ) switch for the third time. Temperature detected by intake sensor is indicated on the display.

NOTE:

Check sensor circuit first if the temperature indicated on the display greatly differs from the actual temperature, and then check sensor.

Is this inspection result normal?

YES >> GO TO 10.
NO >> Go to Intake Sensor Circuit. Refer to HAC-98, "Diagnosis Procedure".

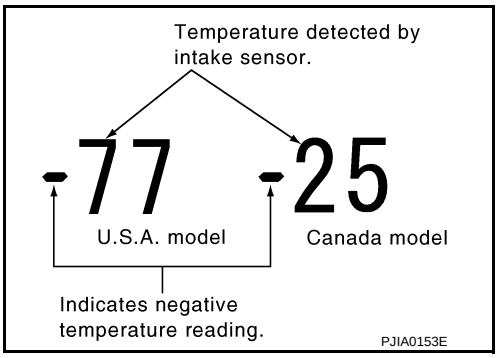

10. CHECK CAN COMMUNICATION ERROR

1. Press intake switch.
2. CAN communication error between each unit that uses the unified meter and A/C amp. can be detected as self-diagnosis results. (The display of each error will blink twice for 0.5 second intervals if plural errors occur.)

Is the inspection result normal?

YES >> INSPECTION END
NO >> Go to CAN communication (Unified meter and A/C amp. – AV control unit). Refer to MWI-49, "Diagnosis Procedure".

Display	CAN communication error
52	In good order
52	AV C/U ⇨ Unified meter and A/C amp.
52	Unified meter and A/C amp. ⇨ All unit

JSIIA0138GB

11. CHECK MALFUNCTIONING SENSOR AND DOOR MOTOR

Refer to the following chart for malfunctioning code No.
(Corresponding code Nos. indicates 1 second each if two or more sensors and door motors malfunction.)
(Corresponding code Nos. indicates 0.5 second each if two door motors malfunction.)

Code No.	Malfunctioning sensor and door motor (Including circuits)	Reference
21 / –21	Ambient sensor	HAC-89, "Diagnosis Procedure"
22 / –22	In-vehicle sensor	HAC-93, "Diagnosis Procedure"
24 / –24	Intake sensor	HAC-98, "Diagnosis Procedure"
25 / –25	Sunload sensor *	HAC-95, "Diagnosis Procedure"
26 / –26	Air mix door motor PBR (Driver side)	HAC-73, "Diagnosis Procedure"
27 / –27	Air mix door motor PBR (Passenger side)	HAC-75, "Diagnosis Procedure"
28 / –28	Gas sensor	HAC-102, "Diagnosis Procedure"
29 / –29	Harness of gas sensor	

*: Perform self-diagnosis STEP-2 under sunshine.

When performing indoors, aim a light (more than 60 W) at sunload sensor, otherwise code No. 25 indicates despite that sunload sensor is functioning normally.

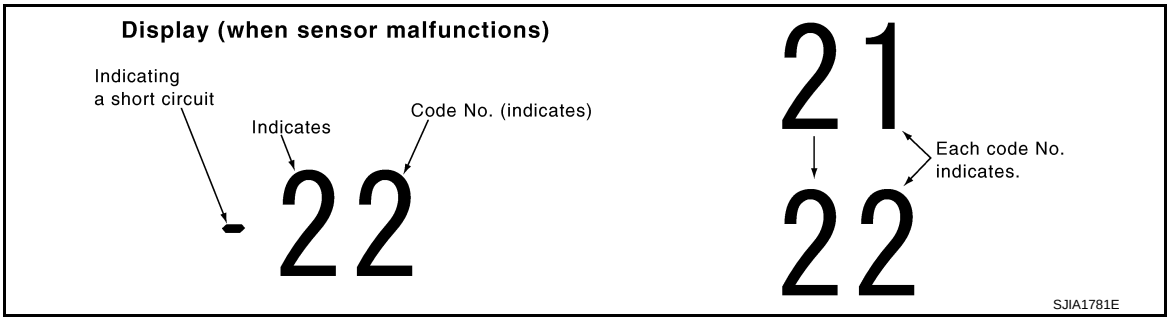

>> INSPECTION END

12. CHECK MALFUNCTIONING DOOR MOTOR POSITION SWITCH

Mode and/or intake door motor PBR(s) is/are malfunctioning.

Code No. *1 *2	Mode or intake door position		Reference
31	VENT	Mode door motor	HAC-71, "Diagnosis Procedure"
32	DEF		
37	FRE	Intake door motor	HAC-79, "WITH ACCS : Diagnosis Procedure"
38	20% FRE		
39	REC		

(Corresponding code Nos. indicates 1 second each if two or more mode or intake door motors malfunction.)
*1: The following display pattern will appear if mode door motor harness connector is disconnected.
31→32→Return to 31
*2: The following display pattern will appear if intake door motor harness connector is disconnected.
37→38→39→Return to 37

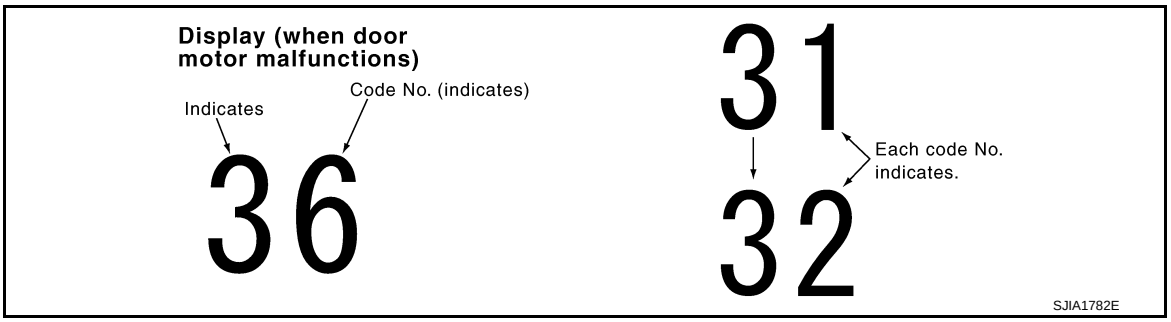

>> INSPECTION END

WITH ACCS : CONSULT-III Function

INFOID:0000000003941442

CONSULT-III APPLICATION ITEMS

CONSULT-III can display each diagnosis item using the diagnosis test modes shown as per the following.

System part	Check item, diagnosis mode	Description
ECM	Data monitor	Displays ECM input data in real time.

DATA MONITOR

Display Item List

Monitor Item	Condition	Value/Status
IGNITION SW	Ignition switch OFF → ON	Off → On

Monitor Item	Condition		Value/Status
HEATER FAN SW	Ignition switch ON	Blower fan motor switch ON	On
		Blower fan motor switch OFF	Off
AIR COND SIG	Ignition switch ON	Compressor ON	On
		Compressor OFF	Off
REFRIGERANT PRESSURE SENSOR	• Engine is running • Warm-up condition • Both A/C switch and blower fan motor switch: ON (Compressor operates)		1.0 – 4.0 V

DTC/CIRCUIT DIAGNOSIS

POWER SUPPLY AND GROUND CIRCUIT

UNIFIED METER AND A/C AMP.

UNIFIED METER AND A/C AMP. : Diagnosis Procedure

INFOID:0000000003894149

1. CHECK FUSE

Check 10A fuses [Nos. 3, 6 and 19, located in the fuse block (J/B)].

NOTE:

Refer to PG-115, "Fuse, Connector and Terminal Arrangement".

Is the inspection result normal?

YES >> GO TO 2.
NO >> Check harness for short circuit and replace fuse.

2. CHECK POWER SUPPLY CIRCUIT FOR UNIFIED METER AND A/C AMP.

1. Disconnect unified meter and A/C amp. connector.
2. Check voltage between unified meter and A/C amp. harness connector and ground.

(+)		(–)	Voltage		
Unified meter and A/C amp.		—	Ignition switch position		
Connector	Terminal		OFF	ACC	ON
M67	41	Ground	Approx. 0 V	Battery voltage	Battery voltage
	53		Approx. 0 V	Approx. 0 V	Battery voltage
	54		Battery voltage	Battery voltage	Battery voltage

Is the inspection result normal?

YES >> GO TO 3.
NO >> Repair harness or connector.

3. CHECK GROUND CIRCUIT FOR UNIFIED METER AND A/C AMP.

1. Turn ignition switch OFF.
2. Check continuity between unified meter and A/C amp. harness connector and ground.

Unified meter and A/C amp.		—	Continuity
Connector	Terminal		
M67	55	Ground	Existed
	71		

Is the inspection result normal?

YES >> INSPECTION END
NO >> Repair harness or connector.

UNIFIED METER AND A/C AMP.

Description

INFOID:0000000003941958

COMPONENT DESCRIPTION

Unified Meter and A/C Amp. (Automatic Amplifier)

The unified meter and A/C amp. (1) has a built-in microcomputer which processes information sent from various sensors needed for air conditioner operation. The air mix door motors, mode door motor, intake door motor, blower motor and compressor are then controlled. When the various switches and temperature control dial are operated, data is input to the unified meter and A/C amp. from the AV control unit using CAN communication.

Self-diagnosis functions are also built into unified meter and A/C amp. to provide quick check of malfunctions in the auto air conditioner system.

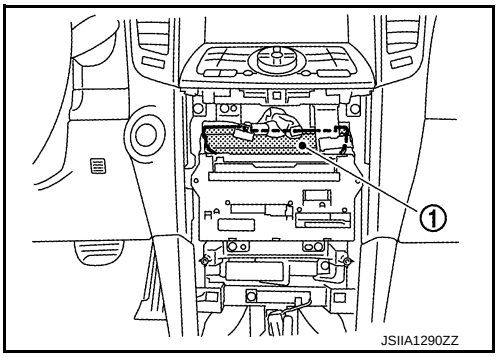

Component Function Check

INFOID:0000000003941959

1. CONFIRM SYMPTOM BY PERFORMING THE FOLLOWING OPERATIONAL CHECK

1. Press AUTO switch.
2. Display should indicate AUTO. Confirm that the compressor clutch engages (sound or visual inspection). (Discharge air and blower speed depend on ambient, in-vehicle and set temperatures.)

Does magnet clutch engaged?

YES >> INSPECTION END
NO >> Go to Diagnosis Procedure. Refer to HAC-70, "Diagnosis Procedure".

Diagnosis Procedure

INFOID:0000000003941960

1. INSPECTION BY FAIL-SAFE FUNCTION

1. Turn the ignition switch ON.
2. After approximately 30 seconds, check that the air conditioner is operated by the fail-safe function (the operation display of air conditioner is not performed). Refer to HAC-151, "Fail-safe".

Is the fail-safe function operated?

YES >> GO TO 3.
NO >> GO TO 2.

2. CHECK UNIFIED METER AND A/C AMP. POWER SUPPLY CIRCUIT AND GROUND

Check unified meter and A/C amp. power supply circuit and ground circuit. Refer to HAC-69, "UNIFIED METER AND A/C AMP. : Diagnosis Procedure".

Is the inspection result normal?

YES >> GO TO 3.
NO >> Repair or replace parts according to the inspection results.

3. CHECK PRESET SWITCH

Check preset switch. Refer to AV-241, "Symptom Table" (WITHOUT NAVIGATION), AV-565, "Symptom Table" [NAVIGATION (SINGLE MONITOR)] or AV-1028, "Symptom Table" [NAVIGATION (TWIN MONITOR)].

Is the inspection result normal?

YES >> Replace unified meter and A/C amp.
NO >> Repair or replace malfunctioning part(s).

MODE DOOR MOTOR

Description

INFOID:0000000003894108

COMPONENT DESCRIPTION

Mode Door Motor

The mode door motor (1) are attached to the heater & cooling unit assembly. It rotates so that air is discharged from the outlet set by the unified meter and A/C amp. Motor rotation is conveyed to a link which activates the mode door.

⇦: Vehicle front

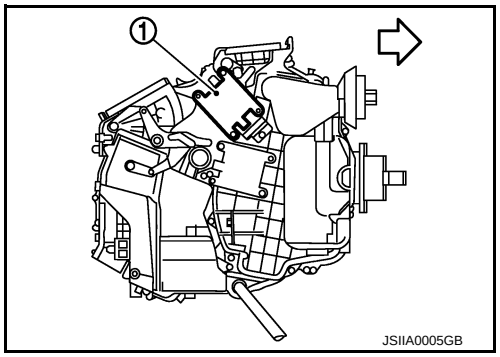

Component Function Check

INFOID:0000000003894109

1. CONFIRM SYMPTOM BY PERFORMING THE FOLLOWING OPERATIONAL CHECK

1. Press MODE switch and DEF switch.
2. Each position indicator should change shape.
3. Confirm that discharge air comes out according to the air distribution table at below. Refer to HAC-23, "WITHOUT ACCS : System Description" (WITHOUT ACCS) or HAC-32, "WITH ACCS : System Description" (WITH ACCS).

NOTE:

Confirm that the compressor clutch is engaged (Sound or visual inspection) and intake door position is at FRE when DEF or D/F is selected.

Is the inspection result normal?

YES >> INSPECTION END

NO >> Go to diagnosis procedure. Refer to HAC-71, "Diagnosis Procedure".

Diagnosis Procedure

INFOID:0000000003894110

1. PERFORM SELF-DIAGNOSIS

Perform self-diagnosis function. Refer to HAC-56, "WITHOUT ACCS : Diagnosis Description" (WITHOUT ACCS) or HAC-62, "WITH ACCS : Diagnosis Description" (WITH ACCS).

Is the inspection result normal?

YES >> GO TO 5.

NO >> GO TO 2.

2. CHECK POWER SUPPLY FOR MODE DOOR MOTOR

Check voltage between mode door motor harness connector and ground.

(+)		(–)	Voltage
Mode door motor		—	
Connector	Terminal		
M253	1	Ground	Battery voltage

Is the inspection result normal?

YES >> GO TO 3.

NO >> Repair harness or connector.

3. CHECK SIGNAL FOR MODE DOOR MOTOR

Confirm A/C LAN signal between mode door motor harness connector and ground using an oscilloscope.

(+)		(–)	Voltage
Mode door motor		—	
Connector	Terminal		
M253	3	Ground	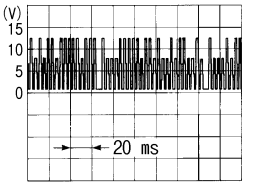 SJIA1453J

Is the inspection result normal?

YES >> GO TO 4.
NO >> Repair harness or connector.

4. CHECK MODE DOOR MOTOR GROUND CIRCUIT

1. Turn ignition switch OFF.
2. Disconnect mode door motor connector.
3. Check continuity between mode door motor harness connector and ground.

Mode door motor		—	Continuity
Connector	Terminal		
M253	2	Ground	Existed

Is the inspection result normal?

YES >> Replace mode door motor.
NO >> Repair harness or connector.

5. CHECK MODE DOOR CONTROL LINKAGE

Check mode door control linkage is properly installed. Refer to HAC-187, "Exploded View".

Is it installed normally?

YES >> INSPECTION END
NO >> Repair or adjust control linkage.

AIR MIX DOOR MOTOR (DRIVER SIDE)

Description

INFOID:0000000003894114

COMPONENT DESCRIPTION

Air Mix Door Motor

The air mix door motor (driver side) (1) is attached to the heater & cooling unit assembly. It rotates so that the air mix door is opened or closed to a position set by the unified meter and A/C amp. Motor rotation is then conveyed through a shaft and the air mix door position feedback is then sent to the unified meter and A/C amp. by PBR built-in air mix door motor.

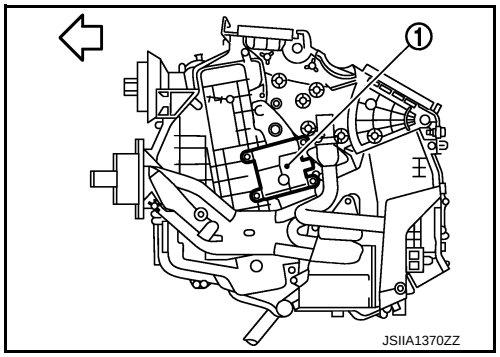

⇦: Vehicle front

Component Function Check

INFOID:0000000003894115

1. CONFIRM SYMPTOM BY PERFORMING THE FOLLOWING OPERATIONAL CHECK

1. Turn temperature control dial (driver side) clockwise until 32.0°C (90°F) is displayed.
2. Check for warm air at discharge air outlets.
3. Turn temperature control dial (driver side) counterclockwise until 18.0°C (60°F) is displayed.
4. Check for cool air at discharge air outlets.

Is the inspection result normal?

YES >> INSPECTION END
NO >> Go to diagnosis procedure. Refer to HAC-73, "Diagnosis Procedure".

Diagnosis Procedure

INFOID:0000000003894116

1. PERFORM SELF-DIAGNOSIS

Perform self-diagnosis function. Refer to HAC-56, "WITHOUT ACCS : Diagnosis Description" (WITHOUT ACCS) or HAC-62, "WITH ACCS : Diagnosis Description" (WITH ACCS).

Is the inspection result normal?

YES >> GO TO 5.
NO >> GO TO 2.

2. CHECK POWER SUPPLY FOR AIR MIX DOOR MOTOR (DRIVER SIDE)

Check voltage between air mix door motor (driver side) harness connector and ground.

(+)		(–)	Voltage
Air mix door motor (driver side)		—	
Connector	Terminal		
M252	1	Ground	Battery voltage

Is the inspection result normal?

YES >> GO TO 3.
NO >> Repair harness or connector.

3. CHECK SIGNAL FOR AIR MIX DOOR MOTOR (DRIVER SIDE)

Confirm A/C LAN signal between air mix door motor (driver side) harness connector and ground using an oscilloscope.

(+)		(–)	Voltage
Air mix door motor (driver side)		—	
Connector	Terminal		
M252	3	Ground	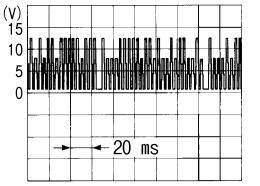 SJIA1453J

Is the inspection result normal?

YES >> GO TO 4.
NO >> Repair harness or connector.

4. CHECK AIR MIX DOOR MOTOR (DRIVER SIDE) GROUND CIRCUIT

1. Turn ignition switch OFF.
2. Disconnect air mix door motor (driver side) connector.
3. Check continuity between air mix door motor (driver side) harness connector and ground.

Air mix door motor (driver side)		—	Continuity
Connector	Terminal		
M252	2	Ground	Existed

Is the inspection result normal?

YES >> Replace air mix door motor (driver side).
NO >> Repair harness or connector.

5. CHECK INSTALLATION OF AIR MIX DOOR MOTOR (DRIVER SIDE)

Check air mix door motor is properly installed (driver side). Refer to HAC-187, "Exploded View".

Is it installed normally?

YES >> INSPECTION END
NO >> Repair or replace air mix door motor (driver side).

AIR MIX DOOR MOTOR (PASSENGER SIDE)

Description

INFOID:0000000004052760

COMPONENT DESCRIPTION

Air Mix Door Motor

The air mix door motor (passenger side) (1) is attached to the heater & cooling unit assembly. It rotates so that the air mix door is opened or closed to a position set by the unified meter and A/C amp. Motor rotation is then conveyed through a shaft and the air mix door position feedback is then sent to the unified meter and A/C amp. by PBR built-in air mix door motor.

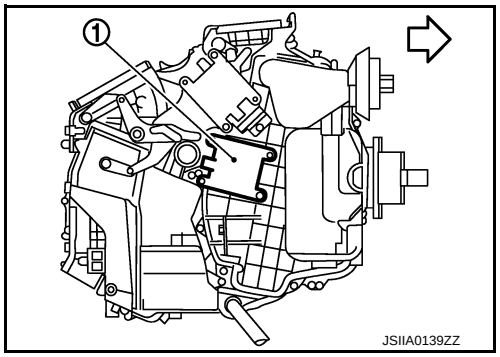

⇦: Vehicle front

Component Function Check

INFOID:0000000004052761

1. CONFIRM SYMPTOM BY PERFORMING THE FOLLOWING OPERATIONAL CHECK

1. Turn temperature control dial (passenger side) clockwise until 32.0°C (90°F) is displayed.
2. Check for warm air at discharge air outlets.
3. Turn temperature control dial (passenger side) counterclockwise until 18.0°C (60°F) is displayed.
4. Check for cool air at discharge air outlets.

Is the inspection result normal?

YES >> INSPECTION END
NO >> Go to diagnosis procedure. Refer to HAC-75, "Diagnosis Procedure".

Diagnosis Procedure

INFOID:0000000004052762

1. PERFORM SELF-DIAGNOSIS

Perform self-diagnosis function. Refer to HAC-56, "WITHOUT ACCS : Diagnosis Description" (WITHOUT ACCS) or HAC-62, "WITH ACCS : Diagnosis Description" (WITH ACCS).

Is the inspection result normal?

YES >> GO TO 5.
NO >> GO TO 2.

2. CHECK POWER SUPPLY FOR AIR MIX DOOR MOTOR (PASSENGER SIDE)

Check voltage between air mix door motor (passenger side) harness connector and ground.

(+)		(–)	Voltage
Air mix door motor (passenger side)		—	
Connector	Terminal		
M255	1	Ground	Battery voltage

Is the inspection result normal?

YES >> GO TO 3.
NO >> Repair harness or connector.

3. CHECK SIGNAL FOR AIR MIX DOOR MOTOR (PASSENGER SIDE)

Confirm A/C LAN signal between air mix door motor (passenger side) harness connector and ground using an oscilloscope.

(+)		(–)	Voltage
Air mix door motor (passenger side)		—	
Connector	Terminal		
M255	3	Ground	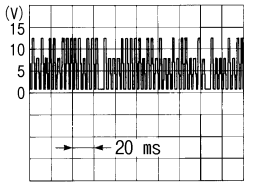 SJIA1453J

Is the inspection result normal?

YES >> GO TO 4.
NO >> Repair harness or connector.

4. CHECK AIR MIX DOOR MOTOR (PASSENGER SIDE) GROUND CIRCUIT

1. Turn ignition switch OFF.
2. Disconnect air mix door motor (passenger side) connector.
3. Check continuity between air mix door motor (passenger side) harness connector and ground.

Air mix door motor (passenger side)		—	Continuity
Connector	Terminal		
M255	2	Ground	Existed

Is the inspection result normal?

YES >> Replace air mix door motor (passenger side).
NO >> Repair harness or connector.

5. CHECK INSTALLATION OF AIR MIX DOOR MOTOR (PASSENGER SIDE)

Check air mix door motor is properly installed (passenger side). Refer to HAC-187, "Exploded View".

Is it installed normally?

YES >> INSPECTION END
NO >> Repair or replace air mix door motor (passenger side).

INTAKE DOOR MOTOR
WITHOUT ACCS

WITHOUT ACCS : Description

INFOID:0000000003894117

COMPONENT DESCRIPTION

Intake Door Motor

The intake door motor (1) is attached to the blower unit. It rotates so that air is drawn from inlets set by the unified meter and A/C amp. Motor rotation is conveyed to a lever which activates the intake door.

⇦: Vehicle front

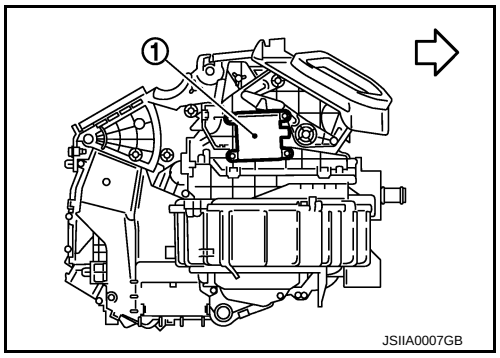

WITHOUT ACCS : Component Function Check

INFOID:0000000003894118

1. CONFIRM SYMPTOM BY PERFORMING THE FOLLOWING OPERATIONAL CHECK

1. Press intake switch.
2. REC indicator turns ON.
3. Listen for intake door position change (Slight change of blower sound can be heard.).
4. Press intake switch again.
5. FRE indicator turns ON.

Is the inspection result normal?

YES >> INSPECTION END
NO >> Go to diagnosis procedure. Refer to HAC-77, "WITHOUT ACCS : Diagnosis Procedure".

WITHOUT ACCS : Diagnosis Procedure

INFOID:0000000003894119

1. PERFORM SELF-DIAGNOSIS

Perform self-diagnosis function. Refer to HAC-56, "WITHOUT ACCS : Diagnosis Description".

Is the inspection result normal?

YES >> GO TO 5.
NO >> GO TO 2.

2. CHECK POWER SUPPLY FOR INTAKE DOOR MOTOR

Check voltage between intake door motor harness connector and ground.

(+)		(–)	Voltage
Intake door motor		—	
Connector	Terminal		
M254	1	Ground	Battery voltage

Is the inspection result normal?

YES >> GO TO 3.
NO >> Repair harness or connector.

3. CHECK SIGNAL FOR INTAKE DOOR MOTOR

Confirm A/C LAN signal between intake door motor harness connector and ground using an oscilloscope.

(+)		(–)	Voltage
Intake door motor		—	
Connector	Terminal		
M254	3	Ground	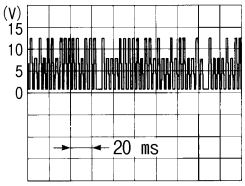 SJIA1453J

Is the inspection result normal?

YES >> GO TO 4.
NO >> Repair harness or connector.

4. CHECK INTAKE DOOR MOTOR GROUND CIRCUIT

1. Turn ignition switch OFF.
2. Disconnect intake door motor connector.
3. Check continuity between intake door motor harness connector and ground.

Intake door motor		—	Continuity
Connector	Terminal		
M254	2	Ground	Existed

Is the inspection result normal?

YES >> Replace intake door motor.
NO >> Repair harness or connector.

5. CHECK INTAKE DOOR CONTROL LINKAGE

Check intake door control linkage is properly installed. Refer to HAC-187, "Exploded View".

Is it installed normally?

YES >> INSPECTION END
NO >> Repair or adjust control linkage.

WITH ACCS

WITH ACCS : Description

INFOID:0000000003941444

COMPONENT DESCRIPTION

Intake Door Motor

The intake door motor (1) is attached to the blower unit. It rotates so that air is drawn from inlets set by the unified meter and A/C amp. Motor rotation is conveyed to a lever which activates the intake door.

⇦: Vehicle front

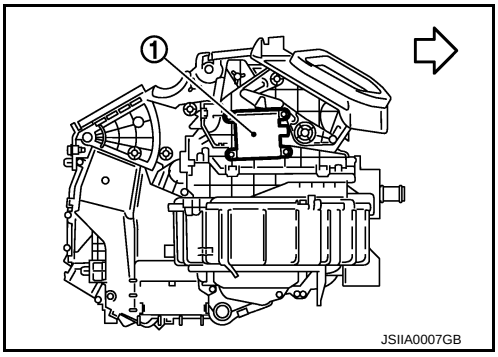

JSIIA0007GB

WITH ACCS : Component Function Check

INFOID:0000000003941445

1. CONFIRM SYMPTOM BY PERFORMING THE FOLLOWING OPERATIONAL CHECK

1. Press AUTO switch. AUTO INTAKE indicator and REC indicator turns ON (auto intake mode).

2. Press intake switch. AUTO INTAKE indicator and REC indicator turns OFF (fixed FRE mode).
3. Press intake switch again. REC indicator turns ON (fixed REC mode).
4. Press intake switch again. AUTO INTAKE indicator and REC indicator turns ON (auto intake mode).
5. Listen for intake door position change. (Slight change of blower sound can be heard.)

NOTE:
Confirm that the compressor clutch is engaged (sound or visual inspection) and the intake door position is at FRE when D/F or DEF is selected.

Is the inspection result normal?

YES >> INSPECTION END
NO >> Go to diagnosis procedure. Refer to HAC-79, "WITH ACCS : Diagnosis Procedure".

WITH ACCS : Diagnosis Procedure

INFOID:0000000003941446

1. PERFORM SELF-DIAGNOSIS

Perform self-diagnosis function. Refer to HAC-62, "WITH ACCS : Diagnosis Description".

Is the inspection result normal?

YES >> GO TO 5.
NO >> GO TO 2.

2. CHECK POWER SUPPLY FOR INTAKE DOOR MOTOR

Check voltage between intake door motor harness connector and ground.

(+)		(–)	Voltage
Intake door motor		—	
Connector	Terminal		
M254	1	Ground	Battery voltage

Is the inspection result normal?

YES >> GO TO 3.
NO >> Repair harness or connector.

3. CHECK SIGNAL FOR INTAKE DOOR MOTOR

Confirm A/C LAN signal between intake door motor harness connector and ground using an oscilloscope.

(+)		(–)	Voltage
Intake door motor		—	
Connector	Terminal		
M254	3	Ground	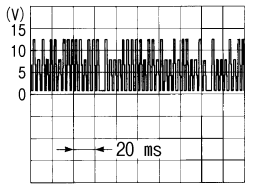

SJIA1453J

Is the inspection result normal?

YES >> GO TO 4.
NO >> Repair harness or connector.

4. CHECK INTAKE DOOR MOTOR GROUND CIRCUIT

1. Turn ignition switch OFF.
2. Disconnect intake door motor connector.
3. Check continuity between intake door motor harness connector and ground.

Intake door motor		—	Continuity
Connector	Terminal		
M254	2	Ground	Existed

Is the inspection result normal?

YES >> Replace intake door motor.
NO >> Repair harness or connector.

5. CHECK INTAKE DOOR CONTROL LINKAGE

Check intake door control linkage is properly installed. Refer to HAC-187, "Exploded View".

Is it installed normally?

YES >> INSPECTION END
NO >> Repair or adjust control linkage.

BLOWER MOTOR

Description

INFOID:0000000003894124

COMPONENT DESCRIPTION

Brush-less Motor

The blower motor utilizes a brush-less motor with a rotating magnet. Quietness is improved over previous motors where the brush was the point of contact and the coil rotated.

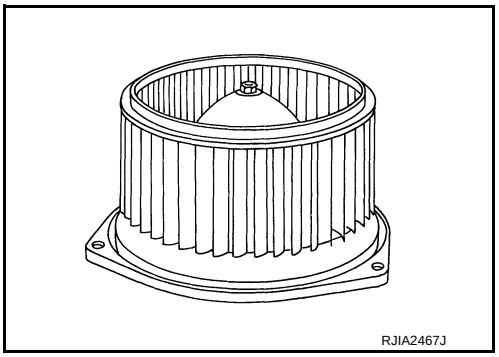

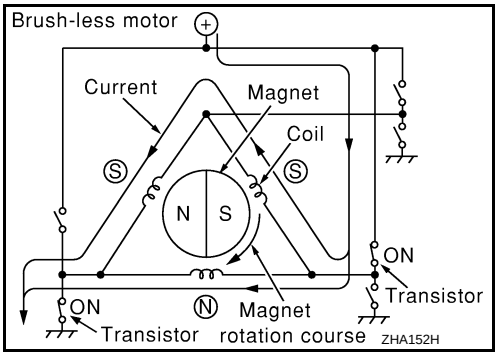

Blower motor circuit

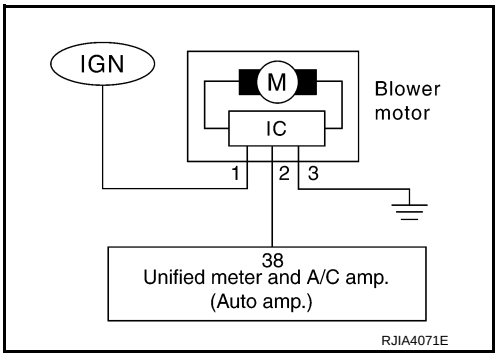

Component Function Check

INFOID:0000000003894125

1. CONFIRM SYMPTOM BY PERFORMING THE FOLLOWING OPERATIONAL CHECK

1. Press fan (UP: +) switch. Blower should operate on low speed.
2. Press fan (UP: +) switch, and continue checking blower speed and fan symbol until all speeds checked.

Is the inspection result normal?

YES >> INSPECTION END
NO >> Go to diagnosis procedure. Refer to HAC-81, "Diagnosis Procedure".

Diagnosis Procedure

INFOID:0000000003894126

1. PERFORM SELF-DIAGNOSIS

Perform self-diagnosis function STEP-4. Refer to HAC-56, "WITHOUT ACCS : Diagnosis Description" (WITHOUT ACCS) or HAC-62, "WITH ACCS : Diagnosis Description" (WITH ACCS).

Code No.	41	42	43	44	45	46
Blower motor duty ratio	37%	91%	65%			91%

Does blower motor speed change according to each code No.?

YES >> INSPECTION END
NO >> GO TO 2.

2. CHECK POWER SUPPLY FOR BLOWER MOTOR

1. Disconnect blower motor connector.
2. Turn ignition switch ON.
3. Check voltage between blower motor harness connector and ground.

(+)		(–)	Voltage
Blower motor		—	
Connector	Terminal		
M109	1	Ground	Battery voltage

Is the inspection result normal?

YES >> GO TO 3.
NO >> GO TO 6.

3. CHECK BLOWER MOTOR GROUND CIRCUIT

1. Turn ignition switch OFF.
2. Check continuity between blower motor harness connector and ground.

blower motor		—	Continuity
Connector	Terminal		
M109	3	Ground	Existed

Is the inspection result normal?

YES >> GO TO 4.
NO >> Repair harness or connector.

4. CHECK CIRCUIT CONTINUITY BETWEEN BLOWER MOTOR AND UNIFIED METER AND A/C AMP.

1. Disconnect unified meter and A/C amp. connector.
2. Check continuity between blower motor harness connector and unified meter and A/C amp. harness connector.

blower motor		Unified meter and A/C amp.		Continuity
Connector	Terminal	Connector	Terminal	
M109	2	M66	38	Existed

3. Check continuity between blower motor harness connector and ground.

blower motor		—	Continuity
Connector	Terminal		
M109	2	ground	Not existed

Is the inspection result normal?

YES >> GO TO 5.
NO >> Repair harness or connector.

5. CHECK UNIFIED METER AND A/C AMP. OUTPUT SIGNAL

1. Reconnect blower motor connector and unified meter and A/C amp. connector.
2. Turn ignition switch ON.
3. Set MODE switch to VENT position.

4. Change fan speed from Lo to Hi, and check duty ratios between blower motor harness connector and ground by using an oscilloscope. Normal terminal 2 drive signal duty ratios are shown in the table below.

Blower fan speed (Manual) Vent mode	1st	2nd	3rd	4th	5th	6th	7th
Blower motor connector M109 terminal No. 2 (Oscilloscope)	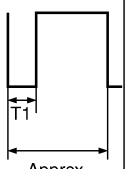	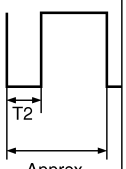	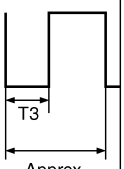	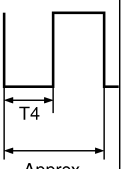	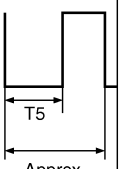	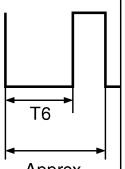	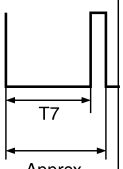
Duty ratio	Approx. 25%	Approx. 33%	Approx. 41%	Approx. 51%	Approx. 61%	Approx. 71%	Approx. 83%

NOTE: Duty ratio = $\frac{Tx}{\text{Approx. 1.6 ms}}$ x 100 (%)

JSIIA0068GB

Is the inspection result normal?

YES >> Replace blower motor after confirming the fan air flow does not change.
NO >> Replace unified meter and A/C amp.

6. CHECK POWER VOLTAGE OF BLOWER RELAY

1. Turn ignition switch OFF.
2. Remove blower relay. Refer to PG-115, "Fuse, Connector and Terminal Arrangement".
3. Turn ignition switch ON.
4. Check the voltage between blower relay fuse block terminals and ground. Refer to PG-113, "Description" for relay terminal assignment.

(+)	(–)	Voltage
Blower relay	—	
1	Ground	Battery voltage
3		

Is the inspection result normal?

YES >> GO TO 7.
NO >> Check ignition power supply circuit. Refer to PG-61, "Wiring Diagram - IGNITION POWER SUPPLY -".

7. CHECK BLOWER RELAY

1. Turn ignition switch OFF.
2. Install blower relay. Refer to PG-115, "Fuse, Connector and Terminal Arrangement".
3. Check operation sound of the blower relay after switching ignition switch ON.

Is the inspection result normal?

YES >> GO TO 8.
NO >> Replace blower relay.

8. CHECK FUSE

Check fuse 15A [Nos. 21 and 22, located in the fuse block (J/B)]. Refer to PG-115, "Fuse, Connector and Terminal Arrangement".

Is the inspection result normal?

YES >> Repair harness or connector.
NO >> Be sure to eliminate cause of malfunction before installing new fuse.

Component Inspection

INFOID:0000000003894127

1. CHECK BLOWER MOTOR

1. Remove blower motor (1). Refer to HA-57, "Exploded View".
2. Confirm smooth rotation of the blower motor.

Is the inspection result normal?

YES >> INSPECTION END
NO >> Replace blower motor.

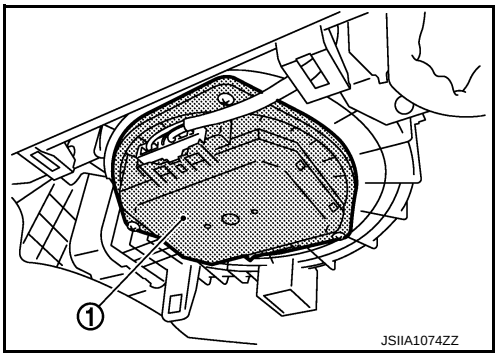

MAGNET CLUTCH

Description

INFOID:0000000003894128

Magnet clutch drives a compressor, by a signal of IPDM E/R.

Component Function Check

INFOID:0000000003894129

1. CONFIRM SYMPTOM BY PERFORMING THE FOLLOWING OPERATIONAL CHECK

1. Press AUTO switch.
2. Display should indicate AUTO. Confirm that the magnet clutch engages (sound or visual inspection). (Discharge air and blower speed depend on ambient, in-vehicle and set temperatures.)

Does the magnet clutch operate?

YES >> INSPECTION END
NO >> Go to Diagnosis Procedure. Refer to HAC-85, "Diagnosis Procedure".

Diagnosis Procedure

INFOID:0000000003894130

1. PERFORM SELF-DIAGNOSIS

Perform self-diagnosis function. Refer to HAC-56, "WITHOUT ACCS : Diagnosis Description" (WITHOUT ACCS) or HAC-62, "WITH ACCS : Diagnosis Description" (WITH ACCS).

Is the inspection result normal?

YES >> INSPECTION END
NO >> GO TO 2.

2. PERFORM IPDM E/R AUTO ACTIVE TEST

Perform IPDM E/R auto active test. Refer to PCS-11, "Diagnosis Description".

Does the magnet clutch operate?

YES-1 >> WITH CONSULT-III: GO TO 5.
YES-2 >> WITHOUT CONSULT-III: GO TO 6.
NO >> Check 10A fuse (No. 49, located in IPDM E/R), and GO TO 3.

3. CHECK CIRCUIT CONTINUITY BETWEEN IPDM E/R AND COMPRESSOR

1. Turn ignition switch OFF.
2. Disconnect IPDM E/R connector and compressor connector.
3. Check continuity between IPDM E/R harness connector and compressor harness connector.

IPDM E/R		Compressor		Continuity
Connector	Terminal	Connector	Terminal	
E7	48	F43	1	Existed

Is the inspection result normal?

YES >> GO TO 4.
NO >> Repair harness or connector.

4. CHECK MAGNET CLUTCH CIRCUIT

Check for operation sound when applying battery voltage direct current to terminal.

Is the inspection result normal?

YES >> Replace IPDM E/R.
NO >> Replace compressor.

5. CHECK ECM INPUT SIGNAL-1

Check A/C switch signal in “Data monitor”. Refer to HAC-61, "WITHOUT ACCS : CONSULT-III Function" (WITHOUT ACCS) or HAC-67, "WITH ACCS : CONSULT-III Function" (WITH ACCS).

A/C SWITCH ON : AIR COND SIG On
A/C SWITCH OFF : AIR COND SIG Off

Is the inspection result normal?

YES >> GO TO 8.
NO >> GO TO 6.

6. CHECK REFRIGERANT PRESSURE SENSOR

WITH CONSULT-III
1. Start the engine.
2. Check voltage of refrigerant pressure sensor in “Data monitor”. Refer to HAC-107, "VQ35HR : Reference Value" (VQ35HR) or HAC-124, "VK50VE : Reference Value" (VK50VE).

WITHOUT CONSULT-III
1. Start the engine.
2. Check voltage between ECM harness connector and ground.

VQ35HR

(+)		(–)	Condition	Voltage
ECM		—		
connector	Terminal			
M107	105	Ground	A/C switch: ON (Blower motor operates.)	Approx. 1.0 - 4.0 V

VK50VE

(+)		(–)	Condition	Voltage
ECM		—		
connector	Terminal			
F111	90	Ground	A/C switch: ON (Blower motor operates.)	Approx. 1.0 - 4.0 V

Is the inspection result normal?

YES >> • WITH CONSULT-III: GO TO 7.
• WITHOUT CONSULT-III: Repair harness or connector.
NO >> Refer to EC-496, "Diagnosis Procedure" (VQ35HR) or EC-1122, "Diagnosis Procedure" (VK50VE).

7. CHECK ECM INPUT SIGNAL-2

Check blower fan motor switch signal in “Data monitor”. Refer to HAC-61, "WITHOUT ACCS : CONSULT-III Function" (WITHOUT ACCS) or HAC-67, "WITH ACCS : CONSULT-III Function" (WITH ACCS).

FAN SWITCH ON : HEATER FAN SW On
FAN SWITCH OFF : HEATER FAN SW Off

Is the inspection result normal?

YES >> GO TO 8.
NO >> Repair harness or connector.

8. CHECK CAN COMMUNICATION

Check CAN communication. Refer to LAN-22, "Trouble Diagnosis Flow Chart".
• ECM – IPDM E/R
• ECM – Unified meter and A/C amp.

Is the inspection result normal?

YES >> Replace ECM.
NO >> Repair or replace malfunctioning part(s).

ECV (ELECTRICAL CONTROL VALVE)

Description

INFOID:0000000005168913

The ECV (electrical control valve) is installed on the compressor and controls it for emitting appropriate amount of refrigerant when necessary.

Diagnosis Procedure

INFOID:0000000005168914

1. CHECK FUSE

Check 10A fuse [No. 3, located in the fuse block (J/B)].
NOTE:
Refer to PG-117, "Fuse, Connector and Terminal Arrangement".

Is the inspection result normal?

YES >> GO TO 2.
NO >> Replace the fuse after repairing the applicable circuit.

2. CHECK ECV POWER SUPPLY CIRCUIT

1. Turn the ignition switch OFF.
2. Disconnect the ECV connector.
3. Turn the ignition switch ON.
4. Check voltage between the ECV harness connector and ground.

(+)		(–)	Voltage
ECV		—	
Connector	Terminal		
F44	2	Ground	Battery voltage

Is the inspection result normal?

YES >> GO TO 3.
NO >> Repair the harnesses or connectors.

3. CHECK ECV CONTROL SIGNAL

1. Turn the ignition switch OFF.
2. Connect the ECV connector.
3. Perform the self-diagnosis STEP-4 (Code No. 45). Refer to HAC-56, "WITHOUT ACCS : Diagnosis Description" (WITHOUT ACCS) or HAC-62, "WITH ACCS : Diagnosis Description" (WITH ACCS).
4. Check output waveform between the unified meter and A/C amp. harness connector and ground with the oscilloscope.

(+)		(–)	Condition	Output waveform
Unified meter and A/C amp.		—		
Connector	Terminal			
M67	65	Ground	• Ignition switch ON • Self-diagnosis. STEP-4 (Code No. 45)	Duty ratio: approx. 50 % 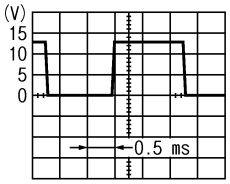 SJIA1607E

Is the inspection result normal?

YES >> Replace the compressor.
NO >> GO TO 4.

4. CHECK CONTINUITY BETWEEN ECV AND UNIFIED METER AND A/C AMP.

1. Turn the ignition switch OFF.

2. Disconnect the ECV connector.
3. Disconnect the unified meter and A/C amp. connector.
4. Check continuity between the ECV harness connector and unified meter and A/C amp. harness connector.

ECV		Unified meter and A/C amp.		Continuity
Connector	Terminal	Connector	Terminal	
F44	3	M67	65	Existed

5. Check for continuity between the ECV harness connector and ground.

ECV		—	Continuity
Connector	Terminal		
F44	3	Ground	Not existed

Is the inspection result normal?

YES >> GO TO 5.
NO >> Repair the harnesses or connectors.

5. CHECK ECV

Check continuity between the ECV connector terminals.

ECV		Continuity
Terminal	Terminal	
2	3	Existed

Is the inspection result normal?

YES >> Replace the unified meter and A/C amp.
NO >> Replace the compressor.

AMBIENT SENSOR

Description

INFOID:0000000003894131

COMPONENT DESCRIPTION

Ambient Sensor

The ambient sensor (1) is attached on hood lock stay assembly. It detects ambient temperature and converts it into a resistance value which is then input into the unified meter and A/C amp.

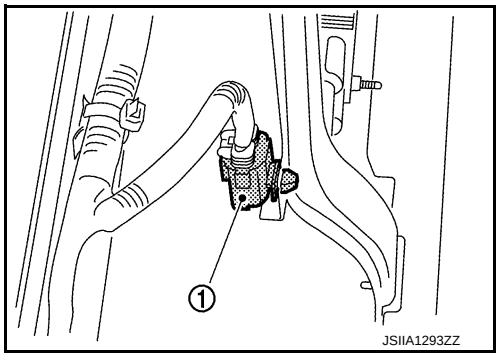

Ambient Sensor Circuit

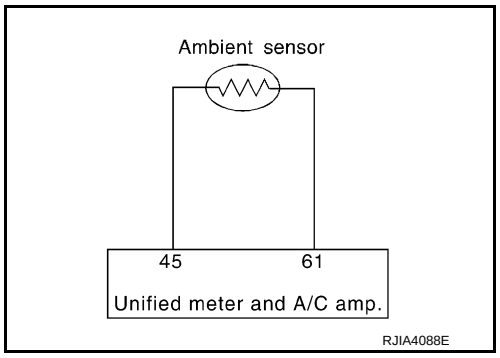

AMBIENT TEMPERATURE INPUT PROCESS

The unified meter and A/C amp. equips a processing circuit for the ambient sensor input. However, when the temperature detected by the ambient sensor increases quickly, the processing circuit retards the unified meter and A/C amp. function. It only allows the unified meter and A/C amp. to recognize an ambient temperature increase of 0.33°C (0.6°F) per 100 seconds.

As an example, consider stopping for a few minutes after high speed driving. Although the actual ambient temperature has not changed, the temperature detected by the ambient sensor increases. This is because the heat from the engine compartment can radiate to the front bumper area, location of the ambient sensor.

Component Function Check

INFOID:0000000003894132

1. PERFORM SELF-DIAGNOSIS

Perform self-diagnosis function STEP-2. Refer to HAC-56, "WITHOUT ACCS : Diagnosis Description" (WITHOUT ACCS) or HAC-62, "WITH ACCS : Diagnosis Description" (WITH ACCS).

21 or –21 is displayed.

YES >> Go to Diagnosis Procedure. Refer to HAC-89, "Diagnosis Procedure".
NO >> INSPECTION END

Diagnosis Procedure

INFOID:0000000003894133

1. CHECK VOLTAGE BETWEEN AMBIENT SENSOR AND GROUND

1. Disconnect ambient sensor connector.
2. Turn ignition switch ON.
3. Check voltage between ambient sensor harness connector and ground.

(+)		(–)	Voltage
Ambient sensor		—	
Connector	Terminal		
E76	1	Ground	Approx. 5 V

Is the inspection result normal?

YES >> GO TO 2.
NO >> GO TO 4.

2. CHECK CIRCUIT CONTINUITY BETWEEN AMBIENT SENSOR AND UNIFIED METER AND A/C AMP.

1. Turn ignition switch OFF.
2. Disconnect unified meter and A/C amp. connector.
3. Check continuity between ambient sensor harness connector and unified meter and A/C amp. harness connector.

Ambient sensor		Unified meter and A/C amp.		Continuity
Connector	Terminal	Connector	Terminal	
E76	2	M67	61	Existed

Is the inspection result normal?

YES >> GO TO 3.
NO >> Repair harness or connector.

3. CHECK AMBIENT SENSOR

Check ambient sensor. Refer to HAC-90, "Component Inspection".

Is the inspection result normal?

YES >> Replace unified meter and A/C amp.
NO >> Replace ambient sensor.

4. CHECK CIRCUIT CONTINUITY BETWEEN AMBIENT SENSOR AND UNIFIED METER AND A/C AMP.

1. Turn ignition switch OFF.
2. Disconnect unified meter and A/C amp. connector.
3. Check continuity between ambient sensor harness connector and unified meter and A/C amp. harness connector.

Ambient sensor		Unified meter and A/C amp.		Continuity
Connector	Terminal	Connector	Terminal	
E76	1	M67	45	Existed

4. Check continuity between ambient sensor harness connector and ground.

Ambient sensor		—	Continuity
Connector	Terminal		
E76	1	Ground	Not existed

Is the inspection result normal?

YES >> Replace unified meter and A/C amp.
NO >> Repair harness or connector.

Component Inspection

INFOID:0000000003894134

1. CHECK AMBIENT SENSOR

1. Turn ignition switch OFF.
2. Disconnect ambient sensor connector. Refer to HAC-180, "Exploded View".
3. Check resistance between ambient sensor terminals.

Terminal		Condition Temperature °C (°F)	Resistance kΩ
1	2	–15 (5)	12.73
		–10 (14)	9.92
		–5 (23)	7.80
		0 (32)	6.19
		5 (41)	4.95
		10 (50)	3.99
		15 (59)	3.24
		20 (68)	2.65
		25 (77)	2.19
		30 (86)	1.81
		35 (95)	1.51
		40 (104)	1.27
		45 (113)	1.07

Is the inspection result normal?

YES >> INSPECTION END
NO >> Replace ambient sensor.

IN-VEHICLE SENSOR

Description

INFOID:0000000003894135

In-vehicle Sensor

The in-vehicle sensor (1) is located on instrument driver lower panel. It converts variations in compartment air temperature drawn from the aspirator into a resistance value. It is then input into the unified meter and A/C amp.

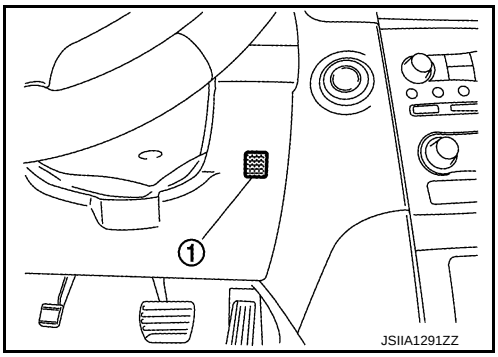

In-vehicle Sensor Circuit

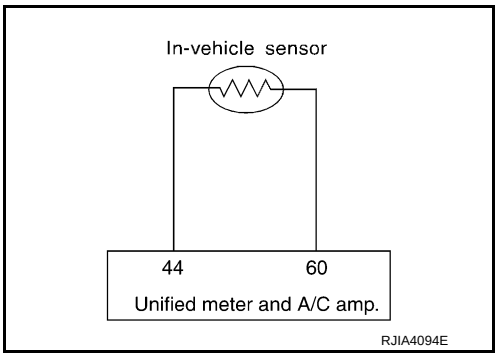

Aspirator

The aspirator (1) is located on driver's side of heater & cooling unit assembly. It produces vacuum pressure due to air discharged from the heater & cooling unit assembly, continuously taking compartment air in the aspirator.

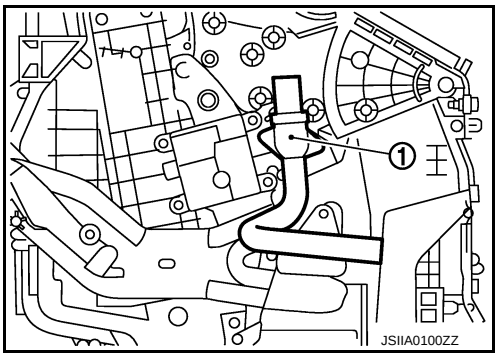

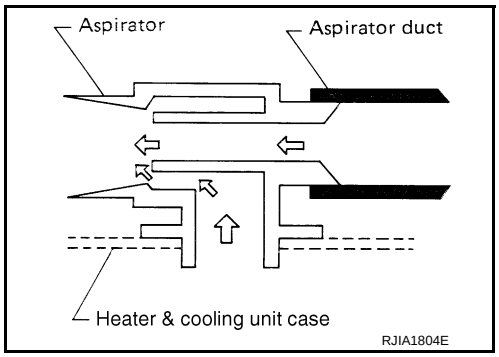

Component Function Check

INFOID:0000000003894136

1. PERFORM SELF-DIAGNOSIS

Perform self-diagnosis function STEP-2. Refer to HAC-56, "WITHOUT ACCS : Diagnosis Description" (WITHOUT ACCS) or HAC-62, "WITH ACCS : Diagnosis Description" (WITH ACCS).

22 or –22 is displayed.

YES >> Go to Diagnosis Procedure. Refer to HAC-93, "Diagnosis Procedure".
NO >> INSPECTION END

Diagnosis Procedure

INFOID:0000000003894137

1. CHECK VOLTAGE BETWEEN IN-VEHICLE SENSOR AND GROUND

1. Disconnect in-vehicle sensor connector.
2. Turn ignition switch ON.
3. Check voltage between in-vehicle sensor harness connector and ground.

(+)		(–)	Voltage
In-vehicle sensor		—	
Connector	Terminal		
M61	1	Ground	Approx. 5 V

Is the inspection result normal?

YES >> GO TO 2.
NO >> GO TO 4.

2. CHECK CIRCUIT CONTINUITY BETWEEN IN-VEHICLE SENSOR AND UNIFIED METER AND A/C AMP.

1. Turn ignition switch OFF.
2. Disconnect unified meter and A/C amp. connector.
3. Check continuity between in-vehicle sensor harness connector and unified meter and A/C amp. harness connector.

In-vehicle sensor		Unified meter and A/C amp.		Continuity
Connector	Terminal	Connector	Terminal	
M61	2	M67	60	Existed

Is the inspection result normal?

YES >> GO TO 3.
NO >> Repair harness or connector.

3. CHECK IN-VEHICLE SENSOR

Check in-vehicle sensor. Refer to HAC-94, "Component Inspection".

Is the inspection result normal?

YES >> Replace unified meter and A/C amp.
NO >> Replace in-vehicle sensor.

4. CHECK CIRCUIT CONTINUITY BETWEEN IN-VEHICLE SENSOR AND UNIFIED METER AND A/C AMP.

1. Turn ignition switch OFF.
2. Disconnect unified meter and A/C amp. connector.
3. Check continuity between in-vehicle sensor harness connector and unified meter and A/C amp. harness connector.

In-vehicle sensor		Unified meter and A/C amp.		Continuity
Connector	Terminal	Connector	Terminal	
M61	1	M67	44	Existed

4. Check continuity between in-vehicle sensor harness connector and ground.

In-vehicle sensor		—	Continuity
Connector	Terminal		
M61	1	Ground	Not existed

Is the inspection result normal?

YES >> Replace unified meter and A/C amp.
NO >> Repair harness or connector.

Component Inspection

INFOID:0000000003894138

1. CHECK IN-VEHICLE SENSOR

1. Turn ignition switch OFF.
2. Disconnect in-vehicle sensor connector. Refer to HAC-181, "Exploded View".
3. Check resistance between in-vehicle sensor terminals.

Terminal		Condition	Resistance kΩ
		Temperature °C (°F)	
1	2	–15 (5)	12.73
		–10 (14)	9.92
		–5 (23)	7.80
		0 (32)	6.19
		5 (41)	4.95
		10 (50)	3.99
		15 (59)	3.24
		20 (68)	2.65
		25 (77)	2.19
		30 (86)	1.81
		35 (95)	1.51
		40 (104)	1.27
		45 (113)	1.07

Is the inspection result normal?

YES >> INSPECTION END
NO >> Replace in-vehicle sensor.

SUNLOAD SENSOR

Description

INFOID:0000000003894139

COMPONENT DESCRIPTION

Sunload Sensor

The sunload sensor (1) is located on the driver's side front defroster grille. It detects sunload entering through windshield by means of a photo diode. The sensor converts the sunload into a current value which is then input into the unified meter and A/C amp.

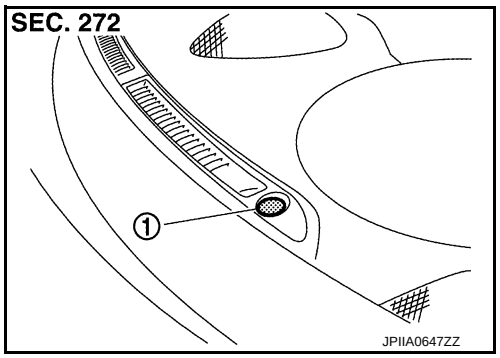

Sunload Sensor Circuit

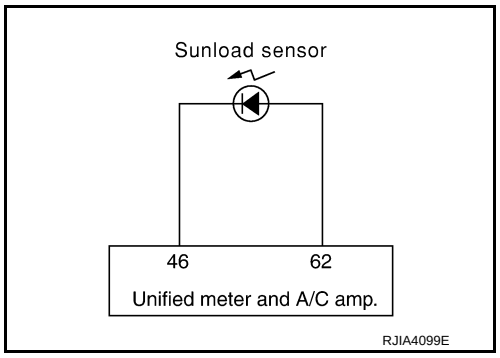

SUNLOAD INPUT PROCESS

The unified meter and A/C amp. also equips a processing circuit which averages the variations in detected sunload over a period of time. This prevents drastic swings in the air temperature control system operation due to small or quick variations in detected sunload.

For example, consider driving along a road bordered by an occasional group of large trees. The sunload detected by the sunload sensor varies whenever the trees obstruct the sunlight. The processing circuit averages the detected sunload over a period of time, so that the (insignificant) effect of the trees momentarily obstructing the sunlight does not cause any change in the air temperature control system operation. On the other hand, shortly after entering a long tunnel, the system recognizes the change in sunload, and the system reacts accordingly.

Component Function Check

INFOID:0000000003894140

1. PERFORM SELF-DIAGNOSIS

Perform self-diagnosis function STEP-2. Refer to HAC-56, "WITHOUT ACCS : Diagnosis Description" (WITHOUT ACCS) or HAC-62, "WITH ACCS : Diagnosis Description" (WITH ACCS.

25 or –25 is displayed.

YES >> Go to Diagnosis Procedure. Refer to HAC-95, "Diagnosis Procedure".
NO >> INSPECTION END

Diagnosis Procedure

INFOID:0000000003894141

1. CHECK VOLTAGE BETWEEN SUNLOAD SENSOR AND GROUND

1. Disconnect sunload sensor connector.
2. Turn ignition switch ON.
3. Check voltage between sunload sensor harness connector and ground.

(+)		(–)	Voltage
Sunload sensor		—	
Connector	Terminal		
M46	1	Ground	Approx. 5 V

Is the inspection result normal?

YES >> GO TO 2.
NO >> GO TO 4.

2. CHECK CIRCUIT CONTINUITY BETWEEN SUNLOAD SENSOR AND UNIFIED METER AND A/C AMP.

1. Turn ignition switch OFF.
2. Disconnect unified meter and A/C amp. connector.
3. Check continuity between sunload sensor harness connector and unified meter and A/C amp. harness connector.

Sunload sensor		Unified meter and A/C amp.		Continuity
Connector	Terminal	Connector	Terminal	
M46	2	M67	62	Existed

Is the inspection result normal?

YES >> GO TO 3.
NO >> Repair harness or connector.

3. CHECK SUNLOAD SENSOR

1. Reconnect sunload sensor connector and unified meter and A/C amp. connector.
2. Check sunload sensor. Refer to HAC-96, "Component Inspection".

Is the inspection result normal?

YES >> Replace unified meter and A/C amp.
NO >> Replace sunload sensor.

4. CHECK CIRCUIT CONTINUITY BETWEEN SUNLOAD SENSOR AND UNIFIED METER AND A/C AMP.

1. Turn ignition switch OFF.
2. Disconnect unified meter and A/C amp. connector.
3. Check continuity between sunload sensor harness connector and unified meter and A/C amp. harness connector.

Sunload sensor		Unified meter and A/C amp.		Continuity
Connector	Terminal	Connector	Terminal	
M46	1	M67	46	Existed

4. Check continuity between sunload sensor harness connector and ground.

Sunload sensor		—	Continuity
Connector	Terminal		
M46	1	Ground	Not existed

Is the inspection result normal?

YES >> Replace unified meter and A/C amp.
NO >> Repair harness or connector.

Component Inspection

INFOID:0000000003894142

1. CHECK SUNLOAD SENSOR

1. Turn ignition switch ON.
2. Check voltage between unified meter and A/C amp. harness connector and ground.

(+)		(–)
Unified meter and A/C amp.		—
Connector	Terminal	
M67	46	Ground

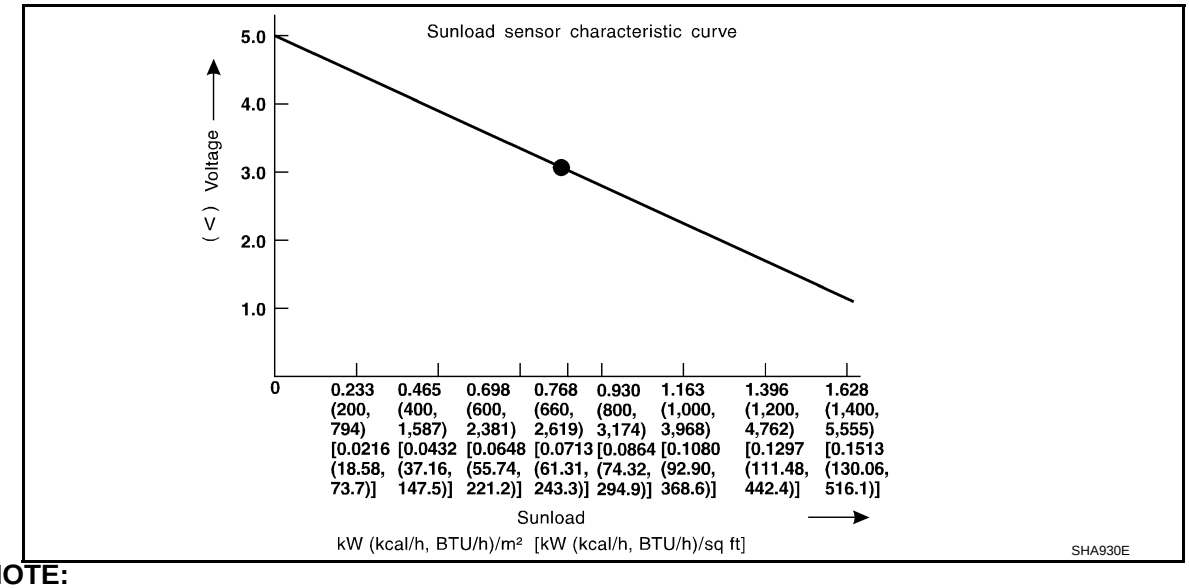

NOTE:
Select a place where sunshine directly on it when checking sunload sensor.

Is the inspection result normal?

YES >> INSPECTION END
NO >> Replace sunload sensor.

INTAKE SENSOR

Description

INFOID:0000000003894143

Intake Sensor

The intake sensor (2) is located on the evaporator. It converts air temperature after it passes through the evaporator (1) into a resistance value which is then input to the unified meter and A/C amp.

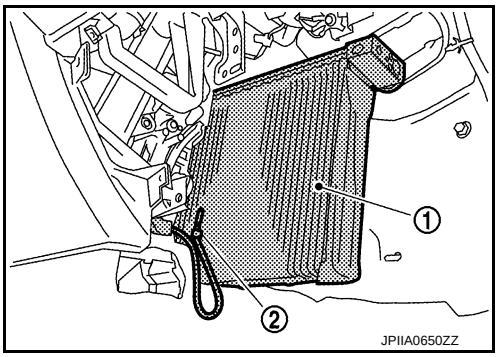

Intake Sensor Circuit

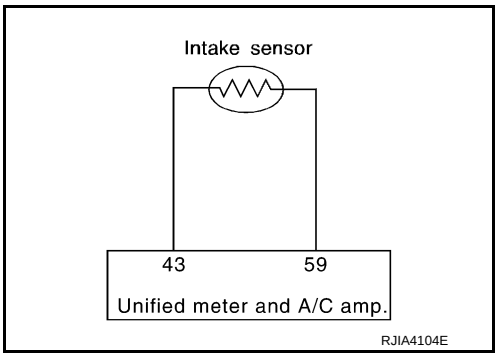

Component Function Check

INFOID:0000000003894144

1. PERFORM SELF-DIAGNOSIS

Perform self-diagnosis function STEP-2. Refer to HAC-56, "WITHOUT ACCS : Diagnosis Description" (WITHOUT ACCS) or HAC-62, "WITH ACCS : Diagnosis Description" (WITH ACCS).

24 or –24 is displayed.

YES >> Go to Diagnosis Procedure. Refer to HAC-98, "Diagnosis Procedure".
NO >> INSPECTION END

Diagnosis Procedure

INFOID:0000000003894145

1. CHECK VOLTAGE BETWEEN INTAKE SENSOR AND GROUND

1. Disconnect intake sensor connector.
2. Turn ignition switch ON.
3. Check voltage between intake sensor harness connector and ground.

(+)		(–)	Voltage
Intake sensor		—	
Connector	Terminal		
M77	1	Ground	Approx. 5 V

Is the inspection result normal?

YES >> GO TO 2.
NO >> GO TO 4.

2. CHECK CIRCUIT CONTINUITY BETWEEN INTAKE SENSOR AND UNIFIED METER AND A/C AMP.

1. Turn ignition switch OFF.
2. Disconnect unified meter and A/C amp. connector.

3. Check continuity between intake sensor harness connector and unified meter and A/C amp. harness connector.

Intake sensor		Unified meter and A/C amp.		Continuity
Connector	Terminal	Connector	Terminal	
M77	2	M67	59	Existed

Is the inspection result normal?

YES >> GO TO 3.
NO >> Repair harness or connector.

3. CHECK INTAKE SENSOR

Check intake sensor. Refer to HAC-99, "Component Inspection".

Is the inspection result normal?

YES >> Replace unified meter and A/C amp.
NO >> Replace intake sensor.

4. CHECK CIRCUIT CONTINUITY BETWEEN INTAKE SENSOR AND UNIFIED METER AND A/C AMP.

1. Turn ignition switch OFF.
2. Disconnect unified meter and A/C amp. connector.
3. Check continuity between intake sensor harness connector and unified meter and A/C amp. harness connector.

Intake sensor		Unified meter and A/C amp.		Continuity
Connector	Terminal	Connector	Terminal	
M77	1	M67	43	Existed

4. Check continuity between intake sensor harness connector and ground.

Intake sensor		—	Continuity
Connector	Terminal		
M77	1	Ground	Not existed

Is the inspection result normal?

YES >> Replace unified meter and A/C amp.
NO >> Repair harness or connector.

Component Inspection

INFOID:0000000003894146

1. CHECK INTAKE SENSOR

1. Turn ignition switch OFF.
2. Disconnect intake sensor connector.
3. Check resistance between intake sensor terminals.

Terminal		Condition Temperature °C (°F)	Resistance kΩ
1	2	–15 (5)	12.34
		–10 (14)	9.62
		–5 (23)	7.56
		0 (32)	6.00
		5 (41)	4.80
		10 (50)	3.87
		15 (59)	3.15
		20 (68)	2.57
		25 (77)	2.12
		30 (86)	1.76
		35 (95)	1.47
		40 (104)	1.23
		45 (113)	1.04

Is the inspection result normal?

YES >> INSPECTION END
NO >> Replace intake sensor.

GAS SENSOR

Description

INFOID:0000000003941447

COMPONENT DESCRIPTION

Gas Sensor

The gas sensor (1) is attached on the radiator core support. It detects smell of exhaust gas and converts it into a duty ratio which is then input into the unified meter and A/C amp.

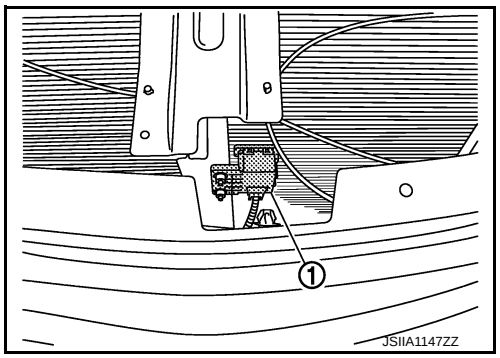

Gas Sensor Circuit

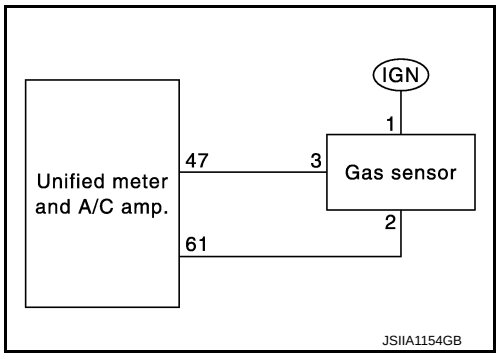

SMELL OF EXHAUST GAS INPUT PROCESS

Gas sensor detects ambient atmospheric CO and NO_2, and converts them to values of resistance. The values are converted to signals with the gas sensor internal circuit, then the unified meter and A/C amp. inputs the signals.

Gas sensor has a construction that detects CO and NO_2 by gas sensor element from the air intake of the case through a filter (waterproof sheet). It sends output signals to the unified meter and A/C amp. in response to a resistance value conversion by gas sensor elements. Output signals prevent a smell of exhaust gas from getting into vehicle by performing corrections according to various driving conditions.

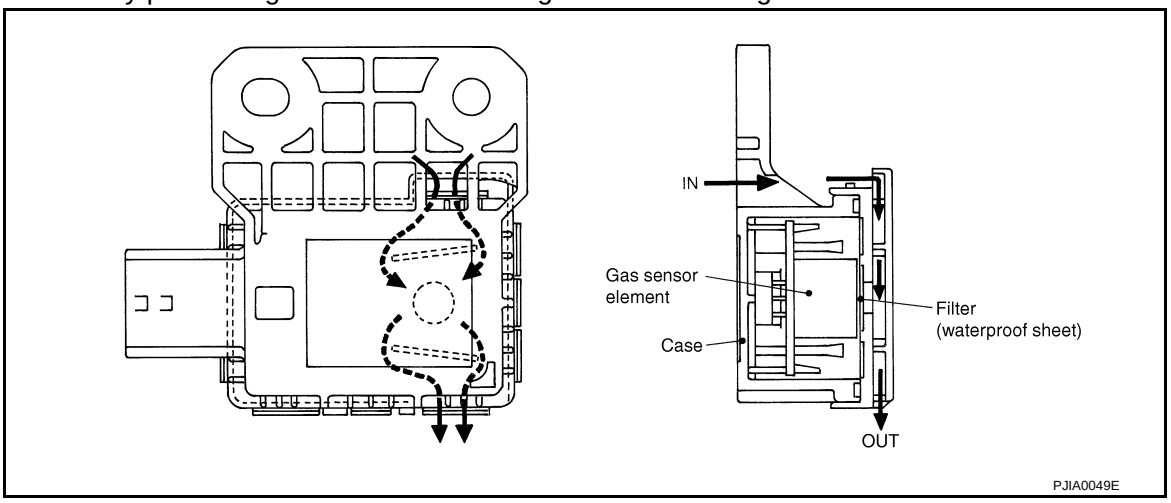

Component Function Check

INFOID:0000000003941448

1. PERFORM SELF-DIAGNOSIS

Perform self-diagnosis function STEP-2. Refer to HAC-62, "WITH ACCS : Diagnosis Description".

28, –28, 29 or –29 is displayed.

YES >> Go to Diagnosis Procedure. Refer to HAC-102, "Diagnosis Procedure".
NO >> INSPECTION END

Diagnosis Procedure

INFOID:0000000003941449

1. CHECK POWER SUPPLY FOR GAS SENSOR

1. Turn ignition switch OFF.
2. Disconnect gas sensor connector.
3. Turn ignition switch ON.
4. Check voltage between gas sensor harness connector and ground.

(+)		(–)	Voltage
Gas sensor		—	
Connector	Terminal		
E75	1	Ground	Battery voltage

Is the inspection result normal?

YES >> GO TO 2.
NO >> Check power supply circuit and 10A fuse (No. 3, located in the fuse block). Refer to PG-115, "Fuse, Connector and Terminal Arrangement".
- If fuse is OK, check harness for open circuit. Repair or replace if necessary.
- If fuse is NG, check harness for short circuit and replace fuse.

2. CHECK GROUND CIRCUIT FOR GAS SENSOR

1. Turn ignition switch OFF.
2. Check continuity between gas sensor harness connector and ground.

Gas sensor		—	Continuity
Connector	Terminal		
E75	2	Ground	Existed

Is the inspection result normal?

YES >> GO TO 3.
NO >> Repair harness or connector.

3. CHECK GAS SENSOR SIGNAL

1. Reconnect gas sensor connector.
2. Turn ignition switch ON.
3. Check signal between gas sensor harness connector and ground using an oscilloscope.

(+)		(–)	Voltage
Gas sensor		—	
Connector	Terminal		
E75	3	Ground	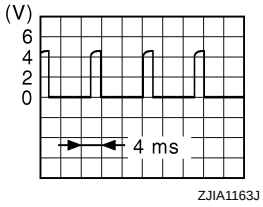

NOTE:
The signal is different by measurement environment of a vehicle.

Is the inspection result normal?

YES >> GO TO 4.
NO >> Replace gas sensor.

4. CHECK CIRCUIT CONTINUITY BETWEEN UNIFIED METER AND A/C AMP. AND GAS SENSOR

1. Turn ignition switch OFF.
2. Disconnect unified meter and A/C amp. connector.
3. Check continuity between unified meter and A/C amp. harness connector and gas sensor harness connector.

Gas sensor		Unified meter and A/C amp.		Continuity
Connector	Terminal	Connector	Terminal	
E75	3	M67	47	Existed

Is the inspection result normal?

YES >> Replace unified meter and A/C amp.
NO >> Repair harnesses or connectors.

IONIZER

Description

INFOID:0000000003941450

Ionizer (1) is attached to the heater & cooling unit assembly (2).

⇦: Vehicle front

Ionizer has two types of operation mode and emits ions into the air
- Clean mode: Emits positive and negative ions at the same ratio.
- Ion control mode: Emits more negative ions.

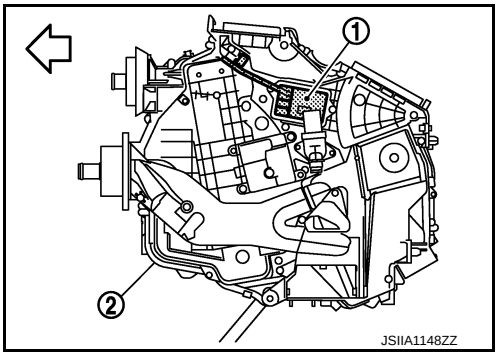

Ionizer circuit

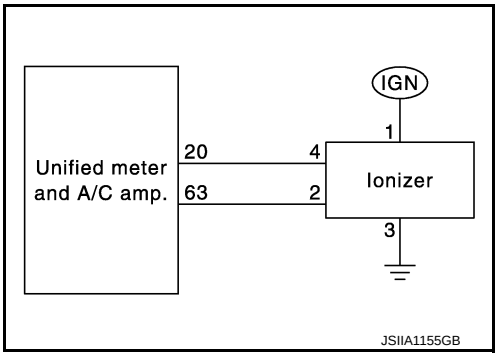

Component Function Check

INFOID:0000000003941451

1. CHECK IONIZER OPERATION SOUND

1. Turn ignition switch ON.
2. Press AUTO switch.
3. Ion indicator (blue) is shown on the display.
4. Check the ionizer operation sound (whirring sound) in the duct by putting an ear to the center ventilator grille (LH) outlet.

Is the inspection result normal?

YES >> INSPECTION END
NO >> Go to Diagnosis Procedure. Refer to HAC-104, "Diagnosis Procedure".

Diagnosis Procedure

INFOID:0000000003941452

1. CHECK POWER SUPPLY FOR IONIZER

1. Turn ignition switch OFF.
2. Disconnect ionizer connector.
3. Turn ignition switch ON.
4. Press fan (UP: +) switch.
5. Check voltage between ionizer harness connector and ground.

(+)		(–)	Voltage
Ionizer		—	
Connector	Terminal		
M57	1	Ground	Battery voltage

Is the inspection result normal?

YES >> GO TO 2.

NO >> Check 10A fuse (No. 3, located in the fuse block). Refer to PG-115, "Fuse, Connector and Terminal Arrangement".
- If fuse is OK, check harness for open circuit. Repair or replace if necessary.
- If fuse is NG, replace fuse and check for short circuit. Repair or replace if necessary.

2. CHECK ION ON/OFF SIGNAL

Check voltage between ionizer harness connector and ground.

(+)		(–)	Voltage
Ionizer		—	
Connector	Terminal		
M57	4	Ground	0 V

Is the inspection result normal?

YES >> GO TO 3.
NO >> GO TO 4.

3. CHECK ION CONTROL MODE OUTPUT SIGNAL

Check voltage between ionizer harness connector and ground.

(+)		(–)	Condition	Voltage
Ionizer		—		
Connector	Terminal			
M57	2	Ground	Clean mode (Ion indicator: Blue)	12 V
			Ion control mode (Ion indicator: Green)	0 V

Is the inspection result normal?

YES >> GO TO 5.
NO >> GO TO 6.

4. CHECK CIRCUIT CONTINUITY BETWEEN UNIFIED METER AND A/C AMP. AND IONIZER

1. Turn ignition switch OFF.
2. Disconnect unified meter and A/C amp. connector.
3. Check continuity between unified meter and A/C amp. harness connector and ionizer harness connector.

Ionizer		Unified meter and A/C amp.		Continuity
Connector	Terminal	Connector	Terminal	
M57	4	M66	20	Existed

Is the inspection result normal?

YES >> Replace unified meter and A/C amp.
NO >> Repair harnesses or connectors.

5. CHECK CIRCUIT CONTINUITY BETWEEN IONIZER AND GROUND

1. Turn ignition switch OFF.
2. Check continuity between ionizer harness connector and ground.

Ionizer		—	Continuity
Connector	Terminal		
M57	3	Ground	Existed

Is the inspection result normal?

YES >> Replace ionizer.
NO >> Repair harnesses or connectors.

6. CHECK CIRCUIT CONTINUITY BETWEEN UNIFIED METER AND A/C AMP. AND IONIZER

1. Turn ignition switch OFF.
2. Disconnect unified meter and A/C amp. connector.
3. Check continuity between unified meter and A/C amp. harness connector and ionizer harness connector.

Ionizer		Unified meter and A/C amp.		Continuity
Connector	Terminal	Connector	Terminal	
M57	2	M67	63	Existed

Is the inspection result normal?

YES >> Replace unified meter and A/C amp.
NO >> Repair harnesses or connectors.

ECU DIAGNOSIS INFORMATION

ECM

VQ35HR

VQ35HR : Reference Value

INFOID:0000000004160929

VALUES ON THE DIAGNOSIS TOOL

NOTE:

- Specification data are reference values.
- Specification data are output/input values which are detected or supplied by the ECM at the connector.
  * Specification data may not be directly related to their components signals/values/operations.
  i.e. Adjust ignition timing with a timing light before monitoring IGN TIMING, because the monitor may show the specification data in spite of the ignition timing not being adjusted to the specification data. This IGN TIMING monitors the data calculated by the ECM according to the signals input from the camshaft position sensor and other ignition timing related sensors.

CONSULT-III MONITOR ITEM

Monitor Item	Condition		Values/Status
ENG SPEED	• Run engine and compare CONSULT-III value with the tachometer indication.		Almost the same speed as the tachometer indication
MAS A/F SE-B1	See EC-136, "Description".		
MAS A/F SE-B2	See EC-136, "Description".		
B/FUEL SCHDL	See EC-136, "Description".		
A/F ALPHA-B1	See EC-136, "Description".		
A/F ALPHA-B2	See EC-136, "Description".		
COOLAN TEMP/S	• Ignition switch: ON		Indicates engine coolant temperature
A/F SEN1 (B1)	• Engine: After warming up	Maintaining engine speed at 2,000 rpm	Fluctuates around 2.2 V
A/F SEN1 (B2)	• Engine: After warming up	Maintaining engine speed at 2,000 rpm	Fluctuates around 2.2 V
HO2S2 (B1)	• Revving engine from idle to 3,000 rpm quickly after the following conditions are met. - Engine: After warming up - After keeping engine speed between 3,500 and 4,000 rpm for 1 minute and at idle for 1 minute under no load		0 - 0.3 V ←→ Approx. 0.6 - 1.0 V
HO2S2 (B2)	• Revving engine from idle to 3,000 rpm quickly after the following conditions are met. - Engine: After warming up - After keeping engine speed between 3,500 and 4,000 rpm for 1 minute and at idle for 1 minute under no load		0 - 0.3 V ←→ Approx. 0.6 - 1.0 V
HO2S2 MNTR (B1)	• Revving engine from idle to 3,000 rpm quickly after the following conditions are met. - Engine: After warming up - After keeping engine speed between 3,500 and 4,000 rpm for 1 minute and at idle for 1 minute under no load		LEAN ←→ RICH
HO2S2 MNTR (B2)	• Revving engine from idle to 3,000 rpm quickly after the following conditions are met. - Engine: After warming up - After keeping engine speed between 3,500 and 4,000 rpm for 1 minute and at idle for 1 minute under no load		LEAN ←→ RICH
VHCL SPEED SE	• Turn drive wheels and compare CONSULT-III value with the speedometer indication.		Almost the same speed as speedometer indication
BATTERY VOLT	• Ignition switch: ON (Engine stopped)		11 - 14 V
ACCEL SEN 1	• Ignition switch: ON (Engine stopped)	Accelerator pedal: Fully released	0.45 - 1.0 V
		Accelerator pedal: Fully depressed	4.4 - 4.8 V

Monitor Item	Condition		Values/Status
ACCEL SEN 2*1	• Ignition switch: ON (Engine stopped)	Accelerator pedal: Fully released	0.45 - 1.0 V
		Accelerator pedal: Fully depressed	4.4 - 4.8 V
TP SEN 1-B1	• Ignition switch: ON (Engine stopped) • Selector lever: D	Accelerator pedal: Fully released	More than 0.36 V
		Accelerator pedal: Fully depressed	Less than 4.75 V
TP SEN 2-B1*1	• Ignition switch: ON (Engine stopped) • Selector lever: D	Accelerator pedal: Fully released	More than 0.36 V
		Accelerator pedal: Fully depressed	Less than 4.75 V
FUEL T/TMP SE	• Ignition switch: ON		Indicates fuel tank temperature
INT/A TEMP SE	• Ignition switch: ON		Indicates intake air temperature
EVAP SYS PRES	• Ignition switch: ON		Approx. 1.8 - 4.8 V
FUEL LEVEL SE	• Ignition switch: ON		Depending on fuel level of fuel tank
START SIGNAL	• Ignition switch: ON → START → ON		OFF → ON → OFF
CLSD THL POS	• Ignition switch: ON (Engine stopped)	Accelerator pedal: Fully released	ON
		Accelerator pedal: Slightly depressed	OFF
AIR COND SIG	• Engine: After warming up, idle the engine	Air conditioner switch: OFF	OFF
		Air conditioner switch: ON (Compressor operates.)	ON
P/N POSI SW	• Ignition switch: ON	Selector lever: P or N	ON
		Selector lever: Except above	OFF
PW/ST SIGNAL	• Engine: After warming up, idle the engine	Steering wheel: Not being turned	OFF
		Steering wheel: Being turned	ON
LOAD SIGNAL	• Ignition switch: ON	Rear window defogger switch: ON and/or Lighting switch: 2nd position	ON
		Rear window defogger switch and lighting switch: OFF	OFF
IGNITION SW	• Ignition switch: ON → OFF → ON		ON → OFF → ON
HEATER FAN SW	• Engine: After warming up, idle the engine	Heater fan switch: ON	ON
		Heater fan switch: OFF	OFF
BRAKE SW	• Ignition switch: ON	Brake pedal: Fully released	OFF
		Brake pedal: Slightly depressed	ON
INJ PULSE-B1	• Engine: After warming up • Selector lever: P or N • Air conditioner switch: OFF • No load	Idle	2.0 - 3.0 msec
		2,000 rpm	1.9 - 2.9 msec
INJ PULSE-B2	• Engine: After warming up • Selector lever: P or N • Air conditioner switch: OFF • No load	Idle	2.0 - 3.0 msec
		2,000 rpm	1.9 - 2.9 msec
IGN TIMING	• Engine: After warming up • Selector lever: P or N • Air conditioner switch: OFF • No load	Idle	6° - 16° BTDC (With 4WAS) 10° - 20° BTDC (Without 4WAS)
		2,000 rpm	25° - 45° BTDC
CAL/LD VALUE	• Engine: After warming up • Selector lever: P or N • Air conditioner switch: OFF • No load	Idle	5% - 35%
		2,500 rpm	5% - 35%

Monitor Item	Condition		Values/Status
MASS AIRFLOW	• Engine: After warming up • Selector lever: P or N • Air conditioner switch: OFF • No load	Idle	2.0 - 6.0 g·m/s
		2,500 rpm	7.0 - 20.0 g·m/s
PURG VOL C/V	• Engine: After warming up • Selector lever: P or N • Air conditioner switch: OFF • No load	Idle (Accelerator pedal: Not depressed even slightly, after engine starting.)	0%
		2,000 rpm	—
INT/V TIM (B1)	• Engine: After warming up • Selector lever: P or N • Air conditioner switch: OFF • No load	Idle	–5° - 5°CA
		2,000 rpm	Approx. 0° - 30°CA
INT/V TIM (B2)	• Engine: After warming up • Selector lever: P or N • Air conditioner switch: OFF • No load	Idle	–5° - 5°CA
		2,000 rpm	Approx. 0° - 30°CA
EXH/V TIM B1	• Engine: After warming up • Selector lever: P or N • Air conditioner switch: OFF • No load	Idle	–5° - 5°CA
		Around 2,500 rpm while the engine speed is rising	Approx. 0° - 30°CA
EXH/V TIM B2	• Engine: After warming up • Selector lever: P or N • Air conditioner switch: OFF • No load	Idle	–5° - 5°CA
		Around 2,500 rpm while the engine speed is rising	Approx. 0° - 30°CA
INT/V SOL (B1)	• Engine: After warming up • Selector lever: P or N • Air conditioner switch: OFF • No load	Idle	0% - 2%
		2,000 rpm	Approx. 0% - 50%
INT/V SOL (B2)	• Engine: After warming up • Selector lever: P or N • Air conditioner switch: OFF • No load	Idle	0% - 2%
		2,000 rpm	Approx. 0% - 50%
VTC DTY EX B1	• Engine: After warming up • Selector lever: P or N • Air conditioner switch: OFF • No load	Idle	0% - 2%
		Around 2,500 rpm while the engine speed is rising	Approx. 0% - 70%
VTC DTY EX B2	• Engine: After warming up • Selector lever: P or N • Air conditioner switch: OFF • No load	Idle	0% - 2%
		Around 2,500 rpm while the engine speed is rising	Approx. 0% - 70%
TP SEN 1-B2	• Ignition switch: ON (Engine stopped) • Selector lever: D	Accelerator pedal: Fully released	More than 0.36 V
		Accelerator pedal: Fully depressed	Less than 4.75 V
TP SEN 2-B2*1	• Ignition switch: ON (Engine stopped) • Selector lever: D	Accelerator pedal: Fully released	More than 0.36 V
		Accelerator pedal: Fully depressed	Less than 4.75 V
AIR COND RLY	• Engine: After warming up, idle the engine	Air conditioner switch: OFF	OFF
		Air conditioner switch: ON (Compressor operates)	ON
FUEL PUMP RLY	• For 1 second after turning ignition switch: ON • Engine running or cranking		ON
	• Except above		OFF
VENT CONT/V	• Ignition switch: ON		OFF
THRTL RELAY	• Ignition switch: ON		ON

Monitor Item	Condition		Values/Status
HO2S2 HTR (B1)	• Engine speed: Below 3,600 rpm after the following conditions are met. - Engine: After warming up - Keeping the engine speed between 3,500 and 4,000 rpm for 1 minute and at idle for 1 minute under no load		ON
	• Engine speed: Above 3,600 rpm		OFF
HO2S2 HTR (B2)	• Engine speed: Below 3,600 rpm after the following conditions are met. - Engine: After warming up - Keeping the engine speed between 3,500 and 4,000 rpm for 1 minute and at idle for 1 minute under no load		ON
	• Engine speed: Above 3,600 rpm		OFF
I/P PULLY SPD	• Vehicle speed: More than 20 km/h (12 MPH)		Almost the same speed as the tachometer indication
VEHICLE SPEED	• Turn drive wheels and compare CONSULT-III value with the speedometer indication.		Almost the same speed as the speedometer indication
IDL A/V LEARN	• Engine: Running	Idle air volume learning has not been performed yet.	YET
		Idle air volume learning has already been performed successfully.	CMPLT
SNOW MODE SW	• Ignition switch: ON	Snow mode switch: ON	ON
		Snow mode switch: OFF	OFF
ENG OIL TEMP	• Engine: After warming up		More than 70°C (158°F)
TRVL AFTER MIL	• Ignition switch: ON	Vehicle has traveled after MIL has illuminated.	0 - 65,535 km (0 - 40,723 miles)
A/F S1 HTR (B1)	• Engine: After warming up, idle the engine (More than 140 seconds after starting engine)		4 - 100%
A/F S1 HTR (B2)	• Engine: After warming up, idle the engine (More than 140 seconds after starting engine)		4 - 100%
AC PRESS SEN	• Engine: Idle • Both A/C switch and blower fan switch: ON (Compressor operates)		1.0 - 4.0 V
VHCL SPEED SE	• Turn drive wheels and compare CONSULT-III value with the speedometer indication.		Almost the same speed as the speedometer indication
SET VHCL SPD	• Engine: Running	ASCD: Operating	The preset vehicle speed is displayed
MAIN SW	• Ignition switch: ON	MAIN switch: Pressed	ON
		MAIN switch: Released	OFF
CANCEL SW	• Ignition switch: ON	CANCEL switch: Pressed	ON
		CANCEL switch: Released	OFF
RESUME/ACC SW	• Ignition switch: ON	RESUME/ACCELERATE switch: Pressed	ON
		RESUME/ACCELERATE switch: Released	OFF
SET SW	• Ignition switch: ON	SET/COAST switch: Pressed	ON
		SET/COAST switch: Released	OFF
BRAKE SW1 (ICC/ASCD brake switch)	• Ignition switch: ON	Brake pedal: Fully released	ON
		Brake pedal: Slightly depressed	OFF
BRAKE SW2 (Stop lamp switch)	• Ignition switch: ON	Brake pedal: Fully released	OFF
		Brake pedal: Slightly depressed	ON
DIST SW	• Ignition switch: ON	DISTANCE switch: Pressed	ON
		DISTANCE switch: Released	OFF
VHCL SPD CUT	• Ignition switch: ON		NON

Monitor Item	Condition		Values/Status
LO SPEED CUT	• Ignition switch: ON		NON
AT OD MONITOR	• Ignition switch: ON		OFF
AT OD CANCEL	• Ignition switch: ON		OFF
CRUISE LAMP	• Ignition switch: ON	MAIN switch: Pressed at the 1st time → at the 2nd time	ON → OFF
SET LAMP	• MAIN switch: ON • When vehicle speed is between 40 km/h (25 MPH) and 144 km/h (89 MPH)	ASCD: Operating	ON
		ASCD: Not operating	OFF
EXH V/T LEARN	• Engine: Running	Exhaust Valve Timing Control Learning has not been performed yet.	YET
		Exhaust Valve Timing Control Learning has not been performed yet.	CMPLT
BAT CUR SEN	• Engine speed: Idle • Battery: Fully charged*2 • Selector lever: P or N • Air conditioner switch: OFF • No load		Approx. 2,600 - 3,500 mV
ALT DUTY	• Engine: Idle		0 - 80%
A/F ADJ-B1	• Engine: Running		–0.330 - 0.330
A/F ADJ-B2	• Engine: Running		–0.330 - 0.330
FAN DUTY	• Engine: Running		0 - 100%
ALT DUTY SIG	• Power generation voltage variable control: Operating		ON
	• Power generation voltage variable control: Not operating		OFF

*1: Accelerator pedal position sensor 2 signal and throttle position sensor 2 signal are converted by ECM internally. Thus, they differ from ECM terminals voltage signal.

*2: Before measuring the terminal voltage, confirm that the battery is fully charged. Refer to PG-3, "How to Handle Battery".

TERMINAL LAYOUT

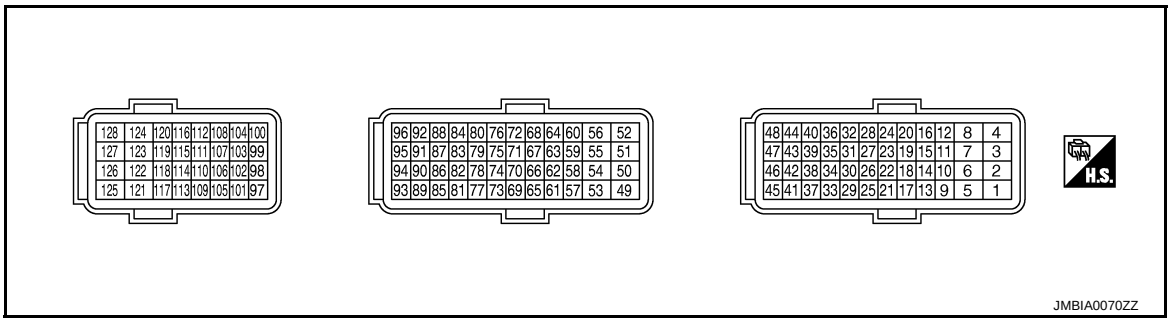

PHYSICAL VALUES

NOTE:
- ECM is located behind the instrument assist lower panel. For this inspection, remove passenger side instrument lower panel.
- Specification data are reference values and are measured between each terminal and ground.
- Pulse signal is measured by CONSULT-III.

Terminal No. (Wire color)		Description		Condition	Value (Approx.)
+	–	Signal name	Input/ Output		
1 (W)	128 (B)	A/F sensor 1 heater (bank 1)	Output	[Engine is running] • Warm-up condition • Idle speed (More than 140 seconds after starting engine)	2.9 - 8.8 V★ 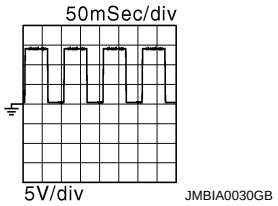
2 (G)	128 (B)	Throttle control motor (Open) (bank 1)	Output	[Ignition switch: ON] • Engine stopped • Selector lever: D • Accelerator pedal: Fully depressed	0 - 14 V★ 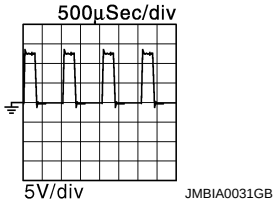
				[Ignition switch: ON] • Engine stopped • Selector lever: D • Accelerator pedal: Fully released	0 - 14 V★ 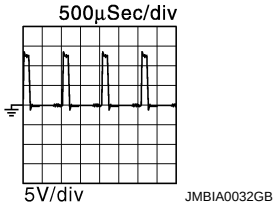
3 (R)	128 (B)	Throttle control motor relay power supply (bank 1)	Input	[Ignition switch: ON]	BATTERY VOLTAGE (11 - 14 V)
4 (BR)	128 (B)	Throttle control motor (Close) (bank 1)	Output	[Ignition switch: ON] • Engine stopped • Selector lever: D • Accelerator pedal: In the middle of releasing operation	0 - 14 V★ 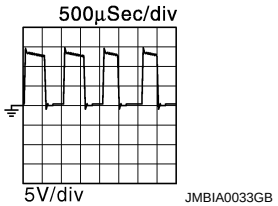
5 (GR)	128 (B)	A/F sensor 1 heater (bank 2)	Output	[Engine is running] • Warm-up condition • Idle speed (More than 140 seconds after starting engine)	2.9 - 8.8 V★ 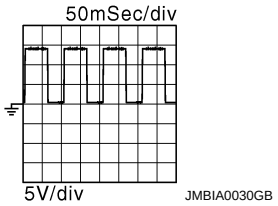
6 (SB)	128 (B)	Exhaust valve timing control magnet retarder (bank 1)	Output	[Engine is running] • Warm-up condition • Idle speed	BATTERY VOLTAGE (11 - 14 V)
				[Engine is running] • Warm-up condition • Around 2,500 rpm while the engine speed is rising	7 - 12 V★ 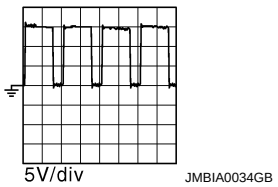

Terminal No. (Wire color)		Description		Condition	Value (Approx.)
+	–	Signal name	Input/ Output		
7 (Y)	128 (B)	Exhaust valve timing control magnet retarder (bank 2)	Output	[Engine is running] • Warm-up condition • Idle speed	BATTERY VOLTAGE (11 - 14 V)
				[Engine is running] • Warm-up condition • Around 2,500 rpm while the engine speed is rising	7 - 12 V★ 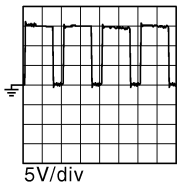 JMBIA0034GB
8 (B)	—	ECM ground	—	—	—
11 (GR) 12 (L) 15 (V) 16 (G) 19 (SB) 20 (Y)	128 (B)	Ignition signal No. 4 Ignition signal No. 3 Ignition signal No. 5 Ignition signal No. 2 Ignition signal No. 6 Ignition signal No. 1	Output	[Engine is running] • Warm-up condition • Idle speed **NOTE:** The pulse cycle changes depending on rpm at idle	0 - 0.2 V★ 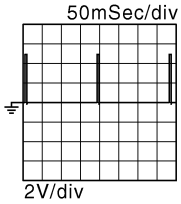 JMBIA0035GB
				[Engine is running] • Warm-up condition • Engine speed: 2,000 rpm	0.1 - 0.4 V★ 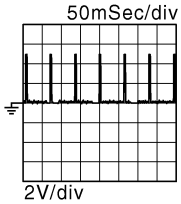 JMBIA0036GB
17 (P)	128 (B)	Heated oxygen sensor 2 heater (bank 1)	Output	[Engine is running] • Engine speed: Below 3,600 rpm after the following conditions are met - Engine: after warming up - Keeping the engine speed between 3,500 and 4,000 rpm for 1 minute and at idle for 1 minute under no load	10 V★ 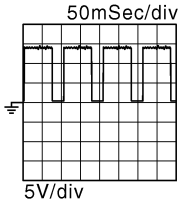 JMBIA0037GB
				[Ignition switch: ON] • Engine stopped [Engine is running] • Engine speed: Above 3,600 rpm	BATTERY VOLTAGE (11 - 14 V)
18 (W)	128 (B)	Intake valve timing control solenoid valve (bank 1)	Output	[Engine is running] • Warm-up condition • Idle speed	BATTERY VOLTAGE (11 - 14 V)
				[Engine is running] • Warm-up condition • Engine speed: 2,000 rpm	7 - 12 V★ 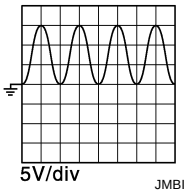 JMBIA1638GB

Terminal No. (Wire color)		Description		Condition	Value (Approx.)
+	–	Signal name	Input/ Output		
21 (GR)	128 (B)	EVAP canister purge volume control solenoid valve	Output	[Engine is running] • Idle speed • Accelerator pedal: Not depressed even slightly, after engine starting	BATTERY VOLTAGE (11 - 14 V)★ 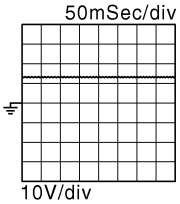 JMBIA0039GB
				[Engine is running] • Engine speed: Approx. 2,000 rpm (More than 100 seconds after starting engine)	BATTERY VOLTAGE (11 - 14 V)★ 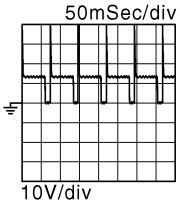 JMBIA0040GB
22 (LG)	128 (B)	Fuel pump relay	Output	[Ignition switch: ON] • For 1 second after turning ignition switch ON [Engine is running]	0 - 1.5 V
				[Ignition switch: ON] • More than 1 second after turning ignition switch ON	BATTERY VOLTAGE (11 - 14 V)
24 (BR)	128 (B)	ECM relay (Self shut-off)	Output	[Engine is running] [Ignition switch: OFF] • A few seconds after turning ignition switch OFF	0 - 1.5 V
				[Ignition switch: OFF] • More than a few seconds after turning ignition switch OFF	BATTERY VOLTAGE (11 - 14 V)
25 (O)	128 (B)	Throttle control motor relay	Output	[Ignition switch: ON → OFF]	0 - 1.0 V ↓ BATTERY VOLTAGE (11 - 14 V) ↓ 0 V
				[Ignition switch: ON]	0 - 1.0 V
29 (G)	128 (B)	Intake valve timing control solenoid valve (bank 2)	Output	[Engine is running] • Warm-up condition • Idle speed	BATTERY VOLTAGE (11 - 14 V)
				[Engine is running] • Warm-up condition • Engine speed: 2,000 rpm	7 - 12 V★ 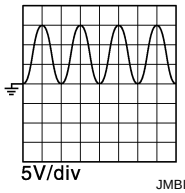 JMBIA1638GB

Terminal No. (Wire color)		Description		Condition	Value (Approx.)
+	–	Signal name	Input/ Output		
30 (Y)	40 (R)	Throttle position sensor 1 (bank 1)	Input	[Ignition switch: ON] • Engine stopped • Selector lever: D • Accelerator pedal: Fully released	More than 0.36 V
				[Ignition switch: ON] • Engine stopped • Selector lever: D • Accelerator pedal: Fully depressed	Less than 4.75 V
31 (R)	48 (W)	Throttle position sensor 1 (bank 2)	Input	[Ignition switch: ON] • Engine stopped • Selector lever: D • Accelerator pedal: Fully released	More than 0.36 V
				[Ignition switch: ON] • Engine stopped • Selector lever: D • Accelerator pedal: Fully depressed	Less than 4.75 V
33 (SB)	128 (B)	Heated oxygen sensor 2 heater (bank 2)	Output	[Engine is running] • Engine speed: Below 3,600 rpm after the following conditions are met - Engine: after warming up - Keeping the engine speed between 3,500 and 4,000 rpm for 1 minute and at idle for 1 minute under no load	10 V★ 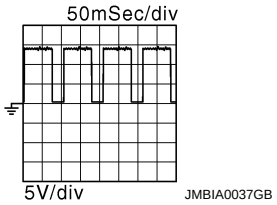
				[Ignition switch: ON] • Engine stopped [Engine is running] • Engine speed: Above 3,600 rpm	BATTERY VOLTAGE (11 - 14 V)
34 (L)	40 (R)	Throttle position sensor 2 (bank 1)	Input	[Ignition switch: ON] • Engine stopped • Selector lever: D • Accelerator pedal: Fully released	Less than 4.75 V
				[Ignition switch: ON] • Engine stopped • Selector lever: D • Accelerator pedal: Fully depressed	More than 0.36 V
35 (B)	48 (W)	Throttle position sensor 2 (bank 2)	Input	[Ignition switch: ON] • Engine stopped • Selector lever: D • Accelerator pedal: Fully released	Less than 4.75 V
				[Ignition switch: ON] • Engine stopped • Selector lever: D • Accelerator pedal: Fully depressed	More than 0.36 V

Terminal No. (Wire color)		Description		Condition	Value (Approx.)
+	–	Signal name	Input/ Output		
37 (LG)	128 (Y)	Crankshaft position sensor	Input	[Engine is running] • Warm-up condition • Idle speed **NOTE:** The pulse cycle changes depending on rpm at idle	4.0 - 5.0 V★ 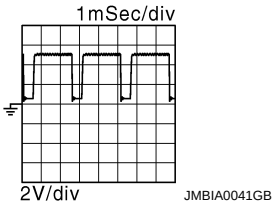
				[Engine is running] • Engine speed: 2,000 rpm	4.0 - 5.0 V★ 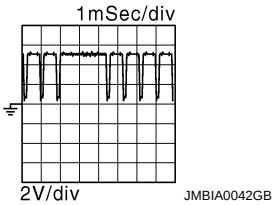
40 (R)	—	Sensor ground [Throttle position sensor (bank 1)]	—	—	—
43 (G)	48 (W)	Sensor power supply [Throttle position sensor (bank 2)]	—	[Ignition switch: ON]	5 V
44 (B)	40 (R)	Sensor power supply [Throttle position sensor (bank 1)]	—	[Ignition switch: ON]	5 V
46 (R)	47 (Y)	Sensor power supply [Crankshaft position sensor]	—	[Ignition switch: ON]	5 V
47 (Y)	—	Sensor ground [Crankshaft position sensor]	—	—	—
48 (W)	—	Sensor ground [Throttle position sensor (bank 2)]	—	—	—
49 (L)	128 (B)	Throttle control motor (Close) (bank 2)	Output	[Ignition switch: ON] • Engine stopped • Selector lever: D • Accelerator pedal: In the middle of releasing operation	0 - 14 V★ 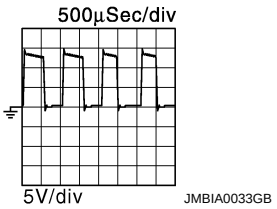

Terminal No. (Wire color)		Description		Condition	Value (Approx.)
+	–	Signal name	Input/ Output		
50 (V)	128 (B)	Throttle control motor (Open) (bank 2)	Output	[Ignition switch: ON] • Engine stopped • Selector lever: D • Accelerator pedal: Fully depressed	0 - 14 V★ 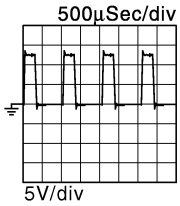 JMBIA0031GB
				[Ignition switch: ON] • Engine stopped • Selector lever: D • Accelerator pedal: Fully released	0 - 14 V★ 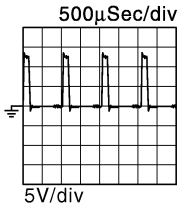 JMBIA0032GB
52 (R)	128 (B)	Throttle control motor relay power supply (bank 2)	Input	[Ignition switch: ON]	BATTERY VOLTAGE (11 - 14 V)
53 (P)	128 (B)	Ignition switch	Input	[Ignition switch: OFF]	0 V
				[Ignition switch: ON]	BATTERY VOLTAGE (11 - 14 V)
57 (L)	128 (B)	A/F sensor 1 (bank 1)	Input	[Ignition switch: ON]	2.2 V
58 (Y)	88 (L)	Exhaust valve timing control position sensor (bank 1)	Input	[Engine is running] • Warm-up condition • Idle speed **NOTE:** The pulse cycle changes depending on rpm at idle	4.0 - 5.0 V★ 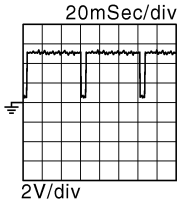 JMBIA0043GB
				[Engine is running] • Warm-up condition • Engine speed: 2,000 rpm	4.0 - 5.0 V★ 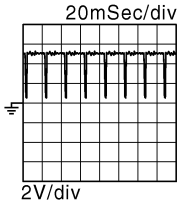 JMBIA0044GB

Terminal No. (Wire color)		Description		Condition	Value (Approx.)
+	–	Signal name	Input/ Output		
59 (O)	96 (B)	Camshaft position sensor (bank 1)	Input	[Engine is running] • Warm-up condition • Idle speed **NOTE:** The pulse cycle changes depending on rpm at idle	3.0 - 5.0 V★ 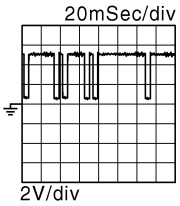 JMBIA0045GB
				[Engine is running] • Engine speed: 2,000 rpm	3.0 - 5.0 V★ 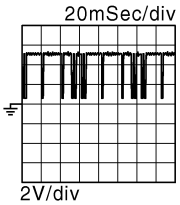 JMBIA0046GB
60 (R)	128 (B)	Sensor power supply [Camshaft position sensor (bank 1), Exhaust valve timing control position sensor (bank 1), Power steering pressure sensor]	—	[Ignition switch: ON]	5 V
61 (R)	128 (B)	A/F sensor 1 (bank 1)	Input	[Engine is running] • Warm-up condition • Engine speed: 2,000 rpm	1.8 V Output voltage varies with air fuel ratio.
62 (G)	88 (L)	Exhaust valve timing control position sensor (bank 2)	Input	[Engine is running] • Warm-up condition • Idle speed **NOTE:** The pulse cycle changes depending on rpm at idle	4.0 - 5.0 V★ 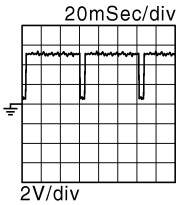 JMBIA0043GB
				[Engine is running] • Warm-up condition • Engine speed: 2,000 rpm	4.0 - 5.0 V★ 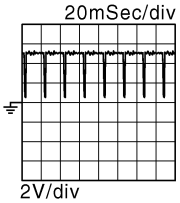 JMBIA0044GB

Terminal No. (Wire color)		Description		Condition	Value (Approx.)
+	–	Signal name	Input/ Output		
63 (SB)	128 (B)	Camshaft position sensor (bank 2)	Input	[Engine is running] • Warm-up condition • Idle speed **NOTE:** The pulse cycle changes depending on rpm at idle	3.0 - 5.0 V★ 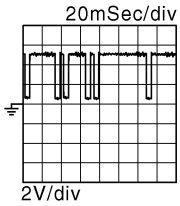
				[Engine is running] • Engine speed: 2,000 rpm	3.0 - 5.0 V★ 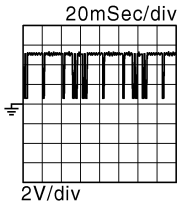
64 (W)	128 (B)	Sensor power supply [Camshaft position sensor (bank 2), Exhaust valve timing control position sensor (bank 2), Battery current sensor]	—	[Ignition switch: ON]	5 V
65 (V)	128 (B)	A/F sensor 1 (bank 2)	Input	[Ignition switch: ON]	2.2 V
66 (LG)	128 (B)	A/F sensor 1 (bank 2)	Input	[Engine is running] • Warm-up condition • Engine speed: 2,000 rpm	1.8 V Output voltage varies with air fuel ratio.
67 (P)	68 (LG)	Intake air temperature sensor (bank 1)	Input	[Engine is running]	0 - 4.8 V Output voltage varies with intake air temperature.
68 (LG)	—	Sensor ground [Mass air flow sensor (bank 1), Intake air temperature sensor (bank 1)]	—	—	—
69 (W)	72 (B/W)	Knock sensor (bank 2)	Input	[Engine is running] • Idle speed	2.5 V*1
71 (Y)	84 (B)	Engine coolant temperature sensor	Input	[Engine is running]	0 - 4.8 V Output voltage varies with engine coolant temperature.
72 (B/W)	—	Sensor ground (Knock sensor)	—	—	—
73 (W)	72 (B/W)	Knock sensor (bank 1)	Input	[Engine is running] • Idle speed	2.5 V*1
76 (W)	84 (B)	Heated oxygen sensor 2 (bank 1)	Input	[Engine is running] • Revving engine from idle to 3,000 rpm quickly after the following conditions are met - Engine: after warming up - Keeping the engine speed between 3,500 and 4,000 rpm for 1 minute and at idle for 1 minute under no load	0 - 1.0 V

Terminal No. (Wire color)		Description		Condition	Value (Approx.)
+	–	Signal name	Input/ Output		
77 (SB)	68 (LG)	Mass air flow sensor (bank 1)	Input	[Engine is running] • Warm-up condition • Idle speed	0.8 - 1.1 V
				[Engine is running] • Warm-up condition • Engine speed: 2,500 rpm	1.4 - 1.7 V
78 (G)	84 (B)	Engine oil temperature sensor	Input	[Engine is running]	0 - 4.8 V Output voltage varies with engine oil temperature.
79 (GR)	94 (LG)	Mass air flow sensor (bank 2)	Input	[Engine is running] • Warm-up condition • Idle speed	0.8 - 1.1 V
				[Engine is running] • Warm-up condition • Engine speed: 2,500 rpm	1.4 - 1.7 V
80 (O)	84 (B)	Heated oxygen sensor 2 (bank 2)	Input	[Engine is running] • Revving engine from idle to 3,000 rpm quickly after the following conditions are met - Engine: after warming up - Keeping the engine speed between 3,500 and 4,000 rpm for 1 minute and at idle for 1 minute under no load	0 - 1.0 V
81 (R) 82 (V) 85 (BR) 86 (W) 89 (GR) 90 (O)	128 (B)	Fuel injector No. 3 Fuel injector No. 6 Fuel injector No. 2 Fuel injector No. 5 Fuel injector No. 1 Fuel injector No. 4	Output	[Engine is running] • Warm-up condition • Idle speed **NOTE:** The pulse cycle changes depending on rpm at idle	BATTERY VOLTAGE (11 - 14 V)★ 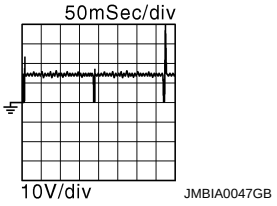
				[Engine is running] • Warm-up condition • Engine speed: 2,000 rpm	BATTERY VOLTAGE (11 - 14 V)★ 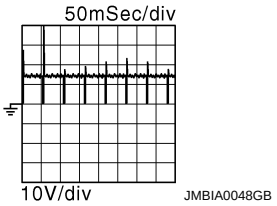
83 (R)	94 (LG)	Intake air temperature sensor (bank 2)	Input	[Engine is running]	0 - 4.8 V Output voltage varies with intake air temperature.
84 (B)	—	Sensor ground (Heated oxygen sensor 2, Engine coolant temperature sensor, Engine oil temperature sensor)	—	—	—
87 (Y)	96 (B)	Power steering pressure sensor	Output	[Engine is running] • Steering wheel: Being turned	0.5 - 4.5 V
				[Engine is running] • Steering wheel: Not being turned	0.4 - 0.8 V

Terminal No. (Wire color)		Description		Condition	Value (Approx.)
+	–	Signal name	Input/ Output		
88 (L)	—	Sensor ground [Exhaust valve timing control position sensor (bank 1), Exhaust valve timing control position sensor (bank 2)]	—	—	—
91 (SB)	95 (G)	Battery current sensor	Input	[Engine is running] • Battery: Fully charged*2 • Idle speed	2.6 - 3.5 V
92 (P)	—	Sensor ground [Camshaft position sensor (bank 2)]	—	[Engine is running] • Warm-up condition • Idle speed	0 V
93 (P)	128 (B)	Power supply for ECM (Back-up)	Input	[Ignition switch: OFF]	BATTERY VOLTAGE (11 - 14 V)
94 (LG)	—	Sensor ground [Mass air flow sensor (bank 2)]	—	—	—
95 (G)	—	Sensor ground (Battery current sensor)	—	—	—
96 (B)	—	Sensor ground [Camshaft position sensor (bank 1), Power steering pressure sensor]	—	—	—
97 (R)	100 (W)	Accelerator pedal position sensor 1	Input	[Ignition switch: ON] • Engine stopped • Accelerator pedal: Fully released	0.45 - 1.0 V
				[Ignition switch: ON] • Engine stopped • Accelerator pedal: Fully depressed	4.4 - 4.8 V
98 (P)*3 (Y)*4	104 (GR)*3 (BR)*4	Accelerator pedal position sensor 2	Input	[Ignition switch: ON] • Engine stopped • Accelerator pedal: Fully released	0.22 - 0.50 V
				[Ignition switch: ON] • Engine stopped • Accelerator pedal: Fully depressed	2.1 - 2.5 V
99 (L)*3 (G)*4	100 (W)	Sensor power supply (Accelerator pedal position sensor 1)	—	[Ignition switch: ON]	5 V
100 (W)	—	Sensor ground (Accelerator pedal position sensor 1)	—	—	—

Terminal No. (Wire color)		Description		Condition	Value (Approx.)
+	–	Signal name	Input/ Output		
101 (SB)	108 (V)	ICC steering switch (models with ICC system)	Input	[Ignition switch: ON] • ICC steering switch: OFF	4.2 V
				[Ignition switch: ON] • MAIN switch: Pressed	0 V
				[Ignition switch: ON] • CANCEL switch: Pressed	1.9 V
				[Ignition switch: ON] • RESUME/ACCELERATE switch: Pressed	3.7 V
				[Ignition switch: ON] • SET/COAST switch: Pressed	3.2 V
				[Ignition switch: ON] • DISTANCE switch: Pressed	2.6 V
				[Ignition switch: ON] • LDP switch: Pressed	1 V
101 (SB)	108 (V)	ASCD steering switch (models with ASCD system)	Input	[Ignition switch: ON] • ASCD steering switch: OFF	4 V
				[Ignition switch: ON] • MAIN switch: Pressed	0 V
				[Ignition switch: ON] • CANCEL switch: Pressed	1 V
				[Ignition switch: ON] • RESUME/ACCELERATE switch: Pressed	3 V
				[Ignition switch: ON] • SET/COAST switch: Pressed	2 V
102 (LG)	112 (V)	EVAP control system pressure sensor	Input	[Ignition switch: ON]	1.8 - 4.8 V
103 (L)*3 (G)*4	104 (GR)*3 (BR)*4	Sensor power supply (Accelerator pedal position sensor 2)	—	[Ignition switch: ON]	5 V
104 (GR)*3 (BR)*4	—	Sensor ground (Accelerator pedal position sensor 2)	—	—	—
105 (L)	116 (W)	Refrigerant pressure sensor	Input	[Engine is running] • Warm-up condition • Both A/C switch and blower fan motor switch: ON (Compressor operates)	1.0 - 4.0 V
106 (W)	128 (B)	Fuel tank temperature sensor	Input	[Engine is running]	0 - 4.8 V Output voltage varies with fuel tank temperature.
107 (BR)	112 (V)	Sensor power supply (EVAP control system pressure sensor)	—	[Ignition switch: ON]	5 V
108 (V)	—	Sensor ground (ASCD/ICC steering switch)	—	—	—

Terminal No. (Wire color)		Description		Condition	Value (Approx.)
+	–	Signal name	Input/ Output		
109 (G)	128 (B)	PNP signal	Input	[Ignition switch: ON] • Selector lever: P or N	BATTERY VOLTAGE (11 - 14 V)
				[Ignition switch: ON] • Selector lever: Except above	0 V
110 (R)	128 (B)	Engine speed signal output	Output	[Engine is running] • Warm-up condition • Idle speed **NOTE:** The pulse cycle changes depending on rpm at idle	1 V★ 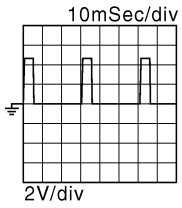 JMBIA0076GB
				[Engine is running] • Engine speed is 2,000 rpm	1 V★ 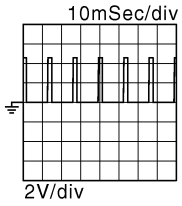 JMBIA0077GB
111 (O)	116 (W)	Sensor power supply (Refrigerant pressure sensor)	—	[Ignition switch: ON]	5 V
112 (V)	—	Sensor ground (EVAP control system pressure sensor)	—	—	—
113 (P)	—	CAN communication line	Input/ Output	—	—
114 (L)	—	CAN communication line	Input/ Output	—	—
116 (W)	—	Sensor ground (Refrigerant pressure sensor)	—	—	—
117 (GR)	—	Data link connector	Input/ Output	—	—
121 (LG)	128 (B)	EVAP canister vent control valve	Output	[Ignition switch: ON]	BATTERY VOLTAGE (11 - 14 V)
122 (P)	128 (B)	Stop lamp switch	Input	[Ignition switch: OFF] • Brake pedal: Fully released	0 V
				[Ignition switch: OFF] • Brake pedal: Slightly depressed	BATTERY VOLTAGE (11 - 14 V)
123 (B) 124 (B)	—	ECM ground	—	—	—
125 (GR)	128 (B)	Power supply for ECM	Input	[Ignition switch: ON]	BATTERY VOLTAGE (11 - 14 V)

Terminal No. (Wire color)		Description		Condition	Value (Approx.)
+	–	Signal name	Input/ Output		
126 (BR)	128 (B)	ICC brake switch (models with ICC system) ASCD brake switch (models with ASCD system)	Input	[Ignition switch: ON] • Brake pedal: Slightly depressed	0 V
				[Ignition switch: ON] • Brake pedal: Fully released	BATTERY VOLTAGE (11 - 14 V)
127 (B) 128 (B)	—	ECM ground	—	—	—

★: Average voltage for pulse signal (Actual pulse signal can be confirmed by oscilloscope.)

*1: This may vary depending on internal resistance of the tester.

**2: Before measuring the terminal voltage, confirm that the battery is fully charged. Refer to PG-3, "How to Handle Battery".

*3: Models with ICC

*4: Models with ASCD

VK50VE

VK50VE : Reference Value

INFOID:0000000004160930

VALUES ON THE DIAGNOSIS TOOL

NOTE:

- Specification data are reference values.
- Specification data are output/input values which are detected or supplied by the ECM at the connector.
  * Specification data may not be directly related to their components signals/values/operations.
  i.e. Adjust ignition timing with a timing light before monitoring IGN TIMING, because the monitor may show the specification data in spite of the ignition timing not being adjusted to the specification data. This IGN TIMING monitors the data calculated by the ECM according to the signals input from the camshaft position sensor and other ignition timing related sensors.

CONSULT-III MONITOR ITEM

Monitor Item	Condition		Values/Status
ENG SPEED	• Run engine and compare CONSULT-III value with the tachometer indication.		Almost the same speed as the tachometer indication
MAS A/F SE-B1	See EC-731, "Description".		
MAS A/F SE-B2	See EC-731, "Description".		
B/FUEL SCHDL	See EC-731, "Description".		
A/F ALPHA-B1	See EC-731, "Description".		
A/F ALPHA-B2	See EC-731, "Description".		
COOLAN TEMP/S	• Ignition switch: ON		Indicates engine coolant temperature
A/F SEN1 (B1)	• Engine: After warming up	Maintaining engine speed at 2,000 rpm	Fluctuates around 2.2 V
A/F SEN1 (B2)	• Engine: After warming up	Maintaining engine speed at 2,000 rpm	Fluctuates around 2.2 V
HO2S2 (B1)	• Revving engine from idle up to 3,000 rpm quickly after the following conditions are met. - Engine: After warming up - After keeping engine speed between 3,500 and 4,000 rpm for 1 minute and at idle for 1 minute under no load		0 - 0.3 V ←→ Approx. 0.6 - 1.0 V
HO2S2 (B2)	• Revving engine from idle up to 3,000 rpm quickly after the following conditions are met. - Engine: After warming up - After keeping engine speed between 3,500 and 4,000 rpm for 1 minute and at idle for 1 minute under no load		0 - 0.3 V ←→ Approx. 0.6 - 1.0 V

Monitor Item	Condition		Values/Status
HO2S2 MNTR (B1)	• Revving engine from idle up to 3,000 rpm quickly after the following conditions are met. - Engine: After warming up - After keeping engine speed between 3,500 and 4,000 rpm for 1 minute and at idle for 1 minute under no load		LEAN ←→ RICH
HO2S2 MNTR (B2)	• Revving engine from idle up to 3,000 rpm quickly after the following conditions are met. - Engine: After warming up - After keeping engine speed between 3,500 and 4,000 rpm for 1 minute and at idle for 1 minute under no load		LEAN ←→ RICH
VHCL SPEED SE	• Turn drive wheels and compare CONSULT-III value with the speedometer indication.		Almost the same speed as speedometer indication
BATTERY VOLT	• Ignition switch: ON (Engine stopped)		11 - 14 V
ACCEL SEN 1	• Ignition switch: ON (Engine stopped)	Accelerator pedal: Fully released	0.45 - 1.0 V
		Accelerator pedal: Fully depressed	4.4 - 4.8 V
ACCEL SEN 2*1	• Ignition switch: ON (Engine stopped)	Accelerator pedal: Fully released	0.45 - 1.0 V
		Accelerator pedal: Fully depressed	4.3 - 4.8 V
TP SEN 1-B1	• Ignition switch: ON (Engine stopped) • Selector lever: D position	Accelerator pedal: Fully released	More than 0.36 V
		Accelerator pedal: Fully depressed	Less than 4.75 V
TP SEN 2-B1*1	• Ignition switch: ON (Engine stopped) • Selector lever: D position	Accelerator pedal: Fully released	More than 0.36 V
		Accelerator pedal: Fully depressed	Less than 4.75 V
FUEL T/TMP SE	• Ignition switch: ON		Indicates fuel tank temperature
EVAP SYS PRES	• Ignition switch: ON		Approx. 1.8 - 4.8 V
FUEL LEVEL SE	• Ignition switch: ON		Depending on fuel level of fuel tank
START SIGNAL	• Ignition switch: ON → START → ON		OFF → ON → OFF
CLSD THL POS	• Ignition switch: ON (Engine stopped)	Accelerator pedal: Fully released	ON
		Accelerator pedal: Slightly depressed	OFF
AIR COND SIG	• Engine: After warming up, idle the engine	Air conditioner switch: OFF	OFF
		Air conditioner switch: ON (Compressor operates.)	ON
PW/ST SIGNAL	• Engine: After warming up, idle the engine	Steering wheel: Not being turned	OFF
		Steering wheel: Being turned	ON
LOAD SIGNAL	• Ignition switch: ON	Rear window defogger switch: ON and/or Lighting switch: 2nd position	ON
		Rear window defogger switch and lighting switch: OFF	OFF
IGNITION SW	• Ignition switch: ON → OFF → ON		ON → OFF → ON
HEATER FAN SW	• Engine: After warming up, idle the engine	Heater fan switch: ON	ON
		Heater fan switch: OFF	OFF
BRAKE SW	• Ignition switch: ON	Brake pedal: Fully released	OFF
		Brake pedal: Slightly depressed	ON
INJ PULSE-B1	• Engine: After warming up • Selector lever: P or N position • A/C switch: OFF • No load	Idle	2.0 - 3.0 msec
		2,000 rpm	1.9 - 2.9 msec

Monitor Item	Condition		Values/Status
INJ PULSE-B2	• Engine: After warming up • Selector lever: P or N position • A/C switch: OFF • No load	Idle	2.0 - 3.0 msec
		2,000 rpm	1.9 - 2.9 msec
IGN TIMING	• Engine: After warming up • Selector lever: P or N position • A/C switch: OFF • No load	Idle	12 - 22°BTDC
		2,000 rpm	25 - 45°BTDC
CAL/LD VALUE	• Engine: After warming up • Selector lever: P or N position • A/C switch: OFF • No load	Idle	5 - 35%
		2,500 rpm	5 - 35%
MASS AIRFLOW	• Engine: After warming up • Selector lever: P or N position • A/C switch: OFF • No load	Idle	2.0 - 6.0 g·m/s
		2,500 rpm	7.0 - 20.0 g·m/s
PURG VOL C/V	• Engine: After warming up • Selector lever: P or N position • A/C switch: OFF • No load	Idle (Accelerator pedal: Not depressed even slightly, after engine starting.)	0%
		2,000 rpm	—
EXH/V TIM B1	• Engine: After warming up • Selector lever: P or N position • A/C switch: OFF • No load	Idle	–5° - 5°CA
		Around 2,500 rpm while the engine speed is rising	Approx. 0 - 30°CA
EXH/V TIM B2	• Engine: After warming up • Selector lever: P or N position • A/C switch: OFF • No load	Idle	–5 - 5°CA
		Around 2,500 rpm while the engine speed is rising	Approx. 0 - 30°CA
INT/V SOL (B1)	• Engine: After warming up • Selector lever: P or N position • A/C switch: OFF • No load	Idle	0 - 2%
		2,000 rpm	Approx. 0 - 50%
INT/V SOL (B2)	• Engine: After warming up • Selector lever: P or N position • A/C switch: OFF • No load	Idle	0 - 2%
		2,000 rpm	Approx. 0 - 50%
AIR COND RLY	• Engine: After warming up, idle the engine	A/C switch: OFF	OFF
		A/C switch: ON (Compressor operates)	ON
VENT CONT/V	• Ignition switch: ON		OFF
THRTL RELAY	• Ignition switch: ON		ON
A/F S1 HTR (B1)	• Engine: After warming up, idle the engine (More than 140 seconds after starting engine)		4 - 100%
A/F S1 HTR (B2)	• Engine: After warming up, idle the engine (More than 140 seconds after starting engine)		4 - 100%
HO2S2 HTR (B1)	• Engine speed: Below 3,600 rpm after the following conditions are met. - Engine: After warming up - Keeping the engine speed between 3,500 and 4,000 rpm for 1 minute and at idle for 1 minute under no load		ON
	• Engine speed: Above 3,600 rpm		OFF
HO2S2 HTR (B2)	• Engine speed: Below 3,600 rpm after the following conditions are met. - Engine: After warming up - Keeping the engine speed between 3,500 and 4,000 rpm for 1 minute and at idle for 1 minute under no load		ON
	• Engine speed: Above 3,600 rpm		OFF

Monitor Item	Condition		Values/Status
ALT DUTY SIG	• Power generation voltage variable control: Operating		ON
	• Power generation voltage variable control: Not operating		OFF
I/P PULLY SPD	• Vehicle speed: More than 20 km/h (12 MPH)		Almost the same speed as the tachometer indication
VEHICLE SPEED	• Turn drive wheels and compare CONSULT-III value with the speedometer indication.		Almost the same speed as the speedometer indication
IDL A/V LEARN	• Engine: Running	Idle air volume learning has not been performed yet.	YET
		Idle air volume learning has already been performed successfully.	CMPLT
TRVL AFTER MIL	• Ignition switch: ON	Vehicle has traveled after MIL has illuminated.	0 - 65,535 km (0 - 40,723 miles)
SNOW MODE SW	• Ignition switch: ON	Snow mode switch: ON	ON
		Snow mode switch: OFF	OFF
ENG OIL TEMP	• Engine: After warming up		More than 70°C (158°F)
VHCL SPEED SE	• Turn drive wheels and compare CONSULT-III value with the speedometer indication.		Almost the same speed as the speedometer indication
SET VHCL SPD	• Engine: Running	ASCD: Operating	The preset vehicle speed is displayed
MAIN SW	• Ignition switch: ON	MAIN switch: Pressed	ON
		MAIN switch: Released	OFF
CANCEL SW	• Ignition switch: ON	CANCEL switch: Pressed	ON
		CANCEL switch: Released	OFF
RESUME/ACC SW	• Ignition switch: ON	RESUME/ACCELERATE switch: Pressed	ON
		RESUME/ACCELERATE switch: Released	OFF
SET SW	• Ignition switch: ON	SET/COAST switch: Pressed	ON
		SET/COAST switch: Released	OFF
BRAKE SW1 (ASCD/ICC brake switch)	• Ignition switch: ON	Brake pedal: Fully released	ON
		Brake pedal: Slightly depressed	OFF
BRAKE SW2 (Stop lamp switch)	• Ignition switch: ON	Brake pedal: Fully released	OFF
		Brake pedal: Slightly depressed	ON
DIST SW	• Ignition switch: ON	DISTANCE switch: Pressed	ON
		DISTANCE switch: Released	OFF
VHCL SPD CUT	• Ignition switch: ON		NON
LO SPEED CUT	• Ignition switch: ON		NON
AT OD MONITOR	• Ignition switch: ON		OFF
AT OD CANCEL	• Ignition switch: ON		OFF
CRUISE LAMP	• Ignition switch: ON	MAIN switch: Pressed at the 1st time → at the 2nd time	ON → OFF
SET LAMP	• MAIN switch: ON • When vehicle speed is between 40 km/h (25 MPH) and 144 km/h (89 MPH)	ASCD: Operating	ON
		ASCD: Not operating	OFF
EXH V/T LEARN	• Engine: Running	Exhaust Valve Timing Control Learning has not been performed yet.	YET
		Exhaust Valve Timing Control Learning has not been performed yet.	CMPLT

Monitor Item	Condition		Values/Status
FAN DUTY	• Engine: Running		0 - 100%
ALT DUTY	• Engine: Idle		0 - 80%
BAT CUR SEN	• Engine speed: Idle • Battery: Fully charged*2 • Selector lever: P or N position • A/C switch: OFF • No load		Approx. 2,600 - 3,500 mV
A/F ADJ-B1	• Engine: Running		–0.330 - 0.330
A/F ADJ-B2	• Engine: Running		–0.330 - 0.330
TP SEN 1-B2	• Ignition switch: ON (Engine stopped) • Selector lever: D position	Accelerator pedal: Fully released	More than 0.36 V
		Accelerator pedal: Fully depressed	Less than 4.75 V
TP SEN 2-B2*1	• Ignition switch: ON (Engine stopped) • Selector lever: D position	Accelerator pedal: Fully released	More than 0.36 V
		Accelerator pedal: Fully depressed	Less than 4.75 V
P/N POSI SW	• Ignition switch: ON	Selector lever: P or N	ON
		Selector lever: Except above position	OFF
INT/A TEMP SE	• Ignition switch: ON		Indicates intake air temperature
AC PRESS SEN	• Engine: Idle • Both A/C switch and blower fan switch: ON (Compressor operates)		1.0 - 4.0 V
VTC DTY EX B1	• Engine: After warming up • Selector lever: P or N position • A/C switch: OFF • No load	Idle	0% - 2%
		Around 2,500 rpm while the engine speed is rising	Approx. 0% - 70%
VTC DTY EX B2	• Engine: After warming up • Selector lever: P or N position • A/C switch: OFF • No load	Idle	0 - 2%
		Around 2,500 rpm while the engine speed is rising	Approx. 0 - 70%
INT/V TIM (B1)	• Engine: After warming up • Selector lever: P or N position • A/C switch: OFF • No load	Idle	–5 - 5°CA
		2,000 rpm	Approx. 0 - 30°CA
INT/V TIM (B2)	• Engine: After warming up • Selector lever: P or N position • A/C switch: OFF • No load	Idle	–5 - 5°CA
		2,000 rpm	Approx. 0 - 30°CA
VVEL LEARN	• Ignition switch: OFF → ON (After warming up)	VVEL learning has not been performed yet.	YET
		VVEL learning has already been performed successfully.	DONE
VVEL SEN LEARN-B1	• VVEL learning has already been performed successfully		Approx. 0.30 - 0.80 V
VVEL SEN LEARN-B2	• VVEL learning has already been performed successfully		Approx. 0.30 - 0.80 V
VVEL POSITION SEN-B1	• Engine: After warming up • Selector lever: P or N position • A/C switch: OFF • No load	Idle	Approx. 0.25 - 1.40 V
		When revving engine up to 2,000 rpm quickly	Approx. 0.25 - 4.75 V
VVEL POSITION SEN-B2	• Engine: After warming up • Selector lever: P or N position • Air conditioner switch: OFF • No load	Idle	Approx. 0.25 - 1.40 V
		When revving engine up to 2,000 rpm quickly	Approx. 0.25 - 4.75 V
VVEL TIM-B1	• Engine: After warming up • Selector lever: P or N position • A/C switch: OFF • No load	Idle	Approx. 0 - 20 deg
		When revving engine up to 2,000 rpm quickly	Approx. 0 - 90 deg

Monitor Item	Condition		Values/Status
VVEL TIM-B2	• Engine: After warming up • Selector lever: P or N position • A/C switch: OFF • No load	Idle	Approx. 0 - 20 deg
		When revving engine up to 2,000 rpm quickly	Approx. 0 - 90 deg
FPCM	• Engine: Cranking		HI
	• Engine: Idle • Engine coolant temperature: More than 10°C (50°F)		LOW

*1: Accelerator pedal position sensor 2 signal and throttle position sensor 2 signal are converted by ECM internally. Thus, they differ from ECM terminals voltage signal.

*2: Before measuring the terminal voltage, confirm that the battery is fully charged. Refer to PG-3, "How to Handle Battery".

TERMINAL LAYOUT

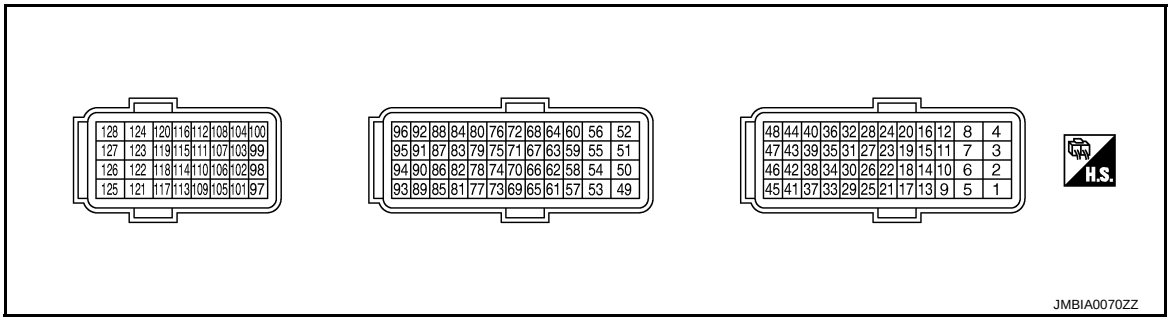

PHYSICAL VALUES

NOTE:
- ECM is located behind the instrument assist lower panel. For this inspection, remove passenger side instrument lower panel.
- Specification data are reference values and are measured between each terminals.
- Pulse signal is measured by CONSULT-III.

Terminal No. (Wire color)		Description		Condition	Value (Approx.)
+	–	Signal name	Input/ Output		
1 (P)	128 (B)	Throttle control motor power supply (bank 2)	Input	[Ignition switch: ON]	BATTERY VOLTAGE (11 - 14 V)
2 (L)	128 (B)	Throttle control motor (bank 2) (Open)	Output	[Ignition switch: ON] • Engine: Stopped • Selector lever: D position • Accelerator pedal: Fully depressed	0 - 14 V★ 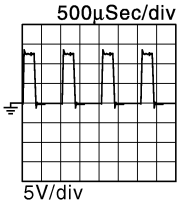 JMBIA0031GB
				[Ignition switch: ON] • Engine: Stopped • Selector lever: D position • Accelerator pedal: Fully released	0 - 14 V★ 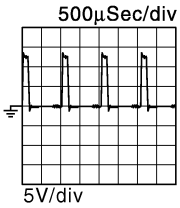 JMBIA0032GB

Terminal No. (Wire color)		Description		Condition	Value (Approx.)
+	–	Signal name	Input/ Output		
3 (Y)	128 (B)	A/F sensor 1 heater (bank 1)	Output	[Engine is running] • Warm-up condition • Idle speed (More than 140 seconds after starting engine)	2.9 - 8.8 V★ 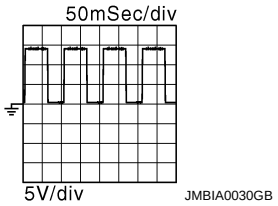
4 (G)	128 (B)	A/F sensor 1 heater (bank 2)	Output	[Engine is running] • Warm-up condition • Idle speed (More than 140 seconds after starting engine)	2.9 - 8.8 V★ 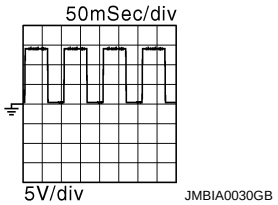
5 (R)	128 (B)	Throttle control motor (bank 2) (Close)	Output	[Ignition switch: ON] • Engine: Stopped • Selector lever: D position • Accelerator pedal: In the middle of releasing operation	0 - 14 V★ 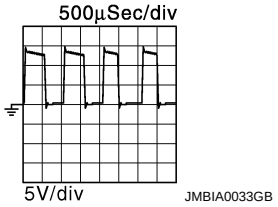
6 (GR)	—	ECM ground	—	—	—
8 (W)	128 (B)	EVAP canister purge volume control solenoid valve	Output	[Engine is running] • Idle speed • Accelerator pedal: Not depressed even slightly, after engine starting	BATTERY VOLTAGE (11 - 14 V)★ 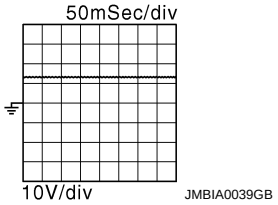
				[Engine is running] • Engine speed: About 2,000 rpm (More than 100 seconds after starting engine)	BATTERY VOLTAGE (11 - 14 V)★ 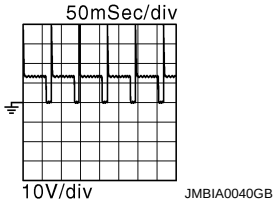

Terminal No. (Wire color)		Description		Condition	Value (Approx.)
+	–	Signal name	Input/ Output		
9 (G) 10 (Y) 13 (V) 14 (GR) 18 (SB) 22 (LG) 26 (L) 30 (Y)	128 (B)	Ignition signal No. 2 Ignition signal No. 1 Ignition signal No. 3 Ignition signal No. 4 Ignition signal No. 5 Ignition signal No. 6 Ignition signal No. 7 Ignition signal No. 8	Output	[Engine is running] • Warm-up condition • Idle speed **NOTE:** The pulse cycle changes depending on rpm at idle	0 - 0.2 V★ 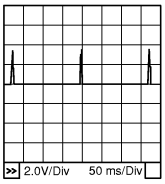 PBIB0044E
				[Engine is running] • Warm-up condition • Engine speed: 2,000 rpm	0.1 - 0.4 V★ 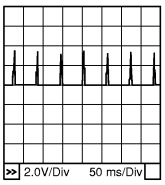 PBIB0045E
15 (O)	128 (B)	ECM relay (Self shut-off)	Output	[Engine is running] [Ignition switch: OFF] • A few seconds after turning ignition switch OFF	0 - 1.5 V
				[Ignition switch: OFF] • More than a few seconds after turning ignition switch OFF	BATTERY VOLTAGE (11 - 14 V)
17 (R) 21 (W) 25 (P) 29 (O) 33 (G) 37 (BR) 41 (W) 45 (V)	128 (B)	Fuel injector No. 3 Fuel injector No. 2 Fuel injector No. 1 Fuel injector No. 7 Fuel injector No. 8 Fuel injector No. 4 Fuel injector No. 5 Fuel injector No. 6	Output	[Engine is running] • Warm-up condition • Idle speed **NOTE:** The pulse cycle changes depending on rpm at idle	BATTERY VOLTAGE (11 - 14 V)★ 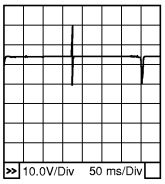 PBIB0042E
				[Engine is running] • Warm-up condition • Engine speed: 2,000 rpm	BATTERY VOLTAGE (11 - 14 V)★ 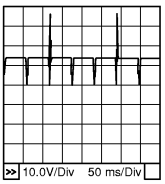 PBIB0043E
19 (L)	128 (B)	Throttle control motor relay	Output	[Ignition switch: ON → OFF]	0 - 1.0 V ↓ BATTERY VOLTAGE (11 - 14 V) ↓ 0 V
				[Ignition switch: ON]	0 - 1.0 V
23 (BR)	—	Sensor ground (Engine coolant temperature sensor)	—	—	—

Terminal No. (Wire color)		Description		Condition	Value (Approx.)
+	–	Signal name	Input/ Output		
24 (Y)	23 (BR)	Engine coolant temperature sensor	Input	[Engine is running]	0 - 4.8 V Output voltage varies with engine coolant temperature.
31 (B)	—	Sensor ground (Heated oxygen sensor 2)	—	—	—
32 (W)	31 (B)	Heated oxygen sensor 2 (bank 1)	Input	[Engine is running] • Revving engine from idle to 3,000 rpm quickly after the following conditions are met - Engine: after warming up - Keeping the engine speed between 3,500 and 4,000 rpm for 1 minute and at idle for 1 minute under no load	0 - 1.0 V
34 (V)	—	Sensor ground (Engine oil temperature sensor)	—	—	—
35 (B/W)	—	Sensor ground (Knock sensor)	—	—	—
36 (LG)	31 (B)	Heated oxygen sensor 2 (bank 2)	Input	[Engine is running] • Revving engine from idle to 3,000 rpm quickly after the following conditions are met - Engine: after warming up - Keeping the engine speed between 3,500 and 4,000 rpm for 1 minute and at idle for 1 minute under no load	0 - 1.0 V
38 (GR)	—	Sensor ground [Mass air flow sensor (bank 2)]	—	—	—
39 (R)	34 (V)	Engine oil temperature sensor	Input	[Engine is running]	0 - 4.8 V Output voltage varies with engine oil temperature.
40 (W)	35 (B/W)	Knock sensor (bank 1)	Input	[Engine is running] • Idle speed	2.5 V*1
42 (B)	—	Sensor ground [Mass air flow sensor (bank 1)/ Intake air temperature sensor]	—	—	—
43 (SB)	38 (GR)	Mass air flow sensor (bank 2)	Input	[Engine is running] • Warm-up condition • Idle speed	0.8 - 1.1 V
				[Engine is running] • Warm-up condition • Engine speed: 2,500 rpm	1.3 - 1.6 V
44 (W)	35 (B/W)	Knock sensor (bank 2)	Input	[Engine is running] • Idle speed	2.5 V*1
47 (L)	42 (B)	Mass air flow sensor (bank 1)	Input	[Engine is running] • Warm-up condition • Idle speed	0.8 - 1.1 V
				[Engine is running] • Warm-up condition • Engine speed: 2,500 rpm	1.3 - 1.6 V
48 (Y)	42 (B)	Intake air temperature sensor	Input	[Engine is running]	0 - 4.8 V Output voltage varies with intake air temperature.

Terminal No. (Wire color)		Description		Condition	Value (Approx.)
+	–	Signal name	Input/ Output		
49 (V)	128 (B)	Throttle control motor power supply (bank 1)	Input	[Ignition switch: ON]	BATTERY VOLTAGE (11 - 14 V)
50 (G)	128 (B)	Throttle control motor (bank 1) (Open)	Output	[Ignition switch: ON] • Engine: Stopped • Selector lever: D position • Accelerator pedal: Fully depressed	0 - 14 V★ 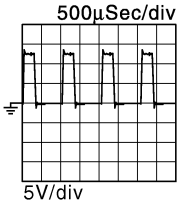 JMBIA0031GB
				[Ignition switch: ON] • Engine: Stopped • Selector lever: D position • Accelerator pedal: Fully released	0 - 14 V★ 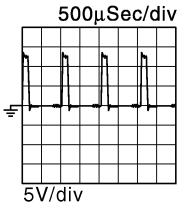 JMBIA0032GB
51 (O)	128 (B)	Intake valve timing control solenoid valve (bank 1)	Output	[Engine is running] • Warm-up condition • Idle speed	BATTERY VOLTAGE (11 - 14 V)
				[Engine is running] • Warm-up condition • Engine speed: 2,000rpm	7 - 12 V★ 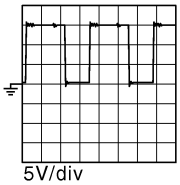 JMBIA0038GB
52 (L)	128 (B)	Intake valve timing control solenoid valve (bank 2)	Output	[Engine is running] • Warm-up condition • Idle speed	BATTERY VOLTAGE (11 - 14 V)
				[Engine is running] • Warm-up condition • Engine speed: 2,000rpm	7 - 12V★ 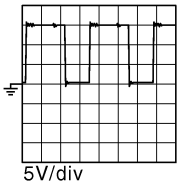 JMBIA0038GB
53 (BR)	128 (B)	Throttle control motor (bank 1) (Close)	Output	[Ignition switch: ON] • Engine: Stopped • Selector lever: D position • Accelerator pedal: In the middle of releasing operation	0 - 14 V★ 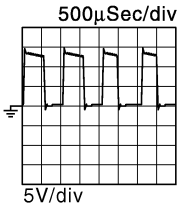 JMBIA0033GB
54 (B)	—	ECM ground	—	—	—

Terminal No. (Wire color)		Description		Condition	Value (Approx.)
+	–	Signal name	Input/ Output		
55 (P)	128 (B)	Heated oxygen sensor 2 heater (bank 2)	Output	[Engine is running] • Engine speed: Below 3,600 rpm after the following conditions are met - Engine: after warming up - Keeping the engine speed between 3,500 and 4,000 rpm for 1 minute and at idle for 1 minute under no load	10 V★ 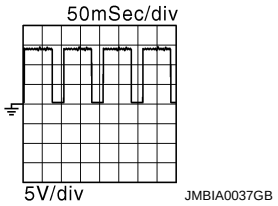
				[Ignition switch: ON] • Engine: Stopped [Engine is running] • Engine speed: Above 3,600 rpm	BATTERY VOLTAGE (11 - 14 V)
56 (R)	128 (B)	Heated oxygen sensor 2 heater (bank 1)	Output	[Engine is running] • Engine speed: Below 3,600 rpm after the following conditions are met - Engine: after warming up - Keeping the engine speed between 3,500 and 4,000 rpm for 1 minute and at idle for 1 minute under no load	10 V★ 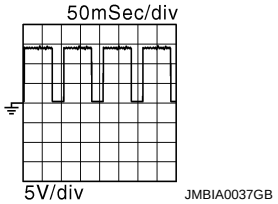
				[Ignition switch: ON] • Engine: Stopped [Engine is running] • Engine speed: Above 3,600 rpm	BATTERY VOLTAGE (11 - 14 V)
57 (Y)	128 (B)	Exhaust valve timing control solenoid valve (bank 2)	Output	[Engine is running] • Warm-up condition • Idle speed	BATTERY VOLTAGE (11 - 14 V)
				[Engine is running] • Warm-up condition • Around 2,500 rpm while the engine speed is rising	7 - 12 V★ 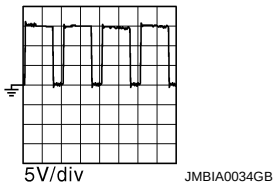
58 (B)	—	Sensor ground [Camshaft position sensor (bank 1)/ Exhaust valve timing control position sensor (bank 1)]	—	—	—

Terminal No. (Wire color)		Description		Condition	Value (Approx.)
+	–	Signal name	Input/ Output		
59 (W)	58 (B)	Camshaft position sensor (bank 1)	Input	[Engine is running] • Warm-up condition • Idle speed **NOTE:** The pulse cycle changes depending on rpm at idle	3.0 - 5.0 V★ 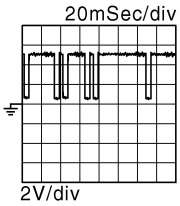 JMBIA0045GB
				[Engine is running] • Engine speed: 2,000 rpm	3.0 - 5.0 V★ 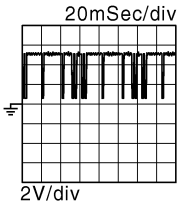 JMBIA0046GB
60 (G)	58 (B)	Exhaust valve timing control position sensor (bank 1)	Input	[Engine is running] • Warm-up condition • Idle speed **NOTE:** The pulse cycle changes depending on rpm at idle	4.0 - 5.0 V★ 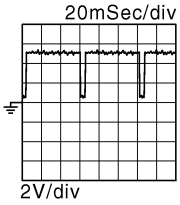 JMBIA0043GB
				[Engine is running] • Warm-up condition • Engine speed: 2,000 rpm	4.0 - 5.0 V★ 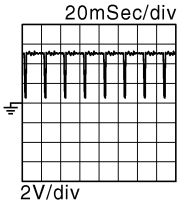 JMBIA0044GB
61 (G)	128 (B)	Exhaust valve timing control solenoid valve (bank 1)	Output	[Engine is running] • Warm-up condition • Idle speed	BATTERY VOLTAGE (11 - 14 V)
				[Engine is running] • Warm-up condition • Around 2,500 rpm while the engine speed is rising	7 - 12 V★ 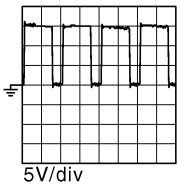 JMBIA0034GB
62 (O)	—	Sensor ground [Camshaft position sensor (bank 2)/ Exhaust valve timing control position sensor (bank 2)]	—	—	—

Terminal No. (Wire color)		Description		Condition	Value (Approx.)
+	–	Signal name	Input/ Output		
63 (BR)	62 (O)	Camshaft position sensor (bank 2)	Input	[Engine is running] • Warm-up condition • Idle speed **NOTE:** The pulse cycle changes depending on rpm at idle	3.0 - 5.0 V★ 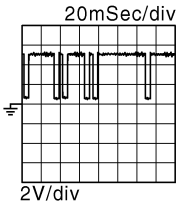 JMBIA0045GB
				[Engine is running] • Engine speed: 2,000 rpm	3.0 - 5.0 V★ 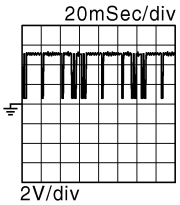 JMBIA0046GB
64 (P)	62 (O)	Exhaust valve timing control position sensor (bank 2)	Input	[Engine is running] • Warm-up condition • Idle speed **NOTE:** The pulse cycle changes depending on rpm at idle	4.0 - 5.0 V★ 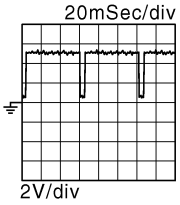 JMBIA0043GB
				[Engine is running] • Warm-up condition • Engine speed: 2,000 rpm	4.0 - 5.0 V★ 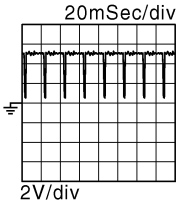 JMBIA0044GB
65 (LG)	128 (B)	VVEL actuator motor relay abort signal (VVEL control module)	Output	[Engine is running] • Warm-up condition • Idle speed	0 V
66 (GR)	—	Sensor ground (Power steering pressure sensor/ Refrigerant pressure sensor)	—	—	—

Terminal No. (Wire color)		Description		Condition	Value (Approx.)
+	–	Signal name	Input/ Output		
67 (Y)	68 (B)	Crankshaft position sensor	Input	[Engine is running] • Warm-up condition • Idle speed **NOTE:** The pulse cycle changes depending on rpm at idle	4.0 - 5.0 V★ 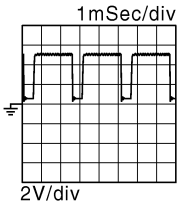
				[Engine is running] • Engine speed: 2,000 rpm	4.0 - 5.0 V★ 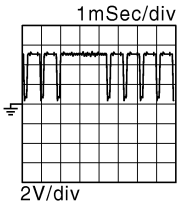
68 (B)	—	Sensor ground (Crankshaft position sensor)	—	—	—
69 (W)	70 (B)	Manifold pressure sensor (This sensor is not for controlling the engine system, nor for the on board diagnosis.)	Input	[Engine is running] • Warm-up condition • Idle speed	1.2 V
				[Engine is running] • Warm-up condition • Engine speed: 2,000 rpm	1.5 V
70 (B)	—	Sensor ground [Battery current sensor/ EVAP control system pressure sensor/ Manifold pressure sensor]	—	—	—
71 (R)	—	Sensor ground [Throttle position sensor (bank 1)]	—	—	—
72 (Y)	—	Sensor ground [Throttle position sensor (bank 2)]	—	—	—
73 (L)	71 (R)	Throttle position sensor 1 (bank 1)	Input	[Ignition switch: ON] • Engine: Stopped • Selector lever: D position • Accelerator pedal: Fully released	More than 0.36 V
				[Ignition switch: ON] • Engine: Stopped • Selector lever: D position • Accelerator pedal: Fully depressed	Less than 4.75 V
74 (R)	72 (Y)	Throttle position sensor 2 (bank 2)	Input	[Ignition switch: ON] • Engine: Stopped • Selector lever: D position • Accelerator pedal: Fully released	Less than 4.75 V
				[Ignition switch: ON] • Engine: Stopped • Selector lever: D position • Accelerator pedal: Fully depressed	More than 0.36 V
76 (G)	70 (B)	Battery current sensor	Input	[Engine is running] • Battery: Fully charged*2 • Idle speed	2.6 - 3.5 V

Terminal No. (Wire color)		Description		Condition	Value (Approx.)
+	–	Signal name	Input/ Output		
77 (B)	72 (Y)	Throttle position sensor 1 (bank 2)	Input	[Ignition switch: ON] • Engine: Stopped • Selector lever: D position • Accelerator pedal: Fully released	More than 0.36 V
				[Ignition switch: ON] • Engine: Stopped • Selector lever: D position • Accelerator pedal: Fully depressed	Less than 4.75 V
78 (Y)	71 (R)	Throttle position sensor 2 (bank 1)	Input	[Ignition switch: ON] • Engine: Stopped • Selector lever: D position • Accelerator pedal: Fully released	Less than 4.75 V
				[Ignition switch: ON] • Engine: Stopped • Selector lever: D position • Accelerator pedal: Fully depressed	More than 0.36 V
80 (GR)	70 (B)	EVAP control system pressure sensor	Input	[Ignition switch: ON]	1.8 - 4.8 V
81 (V)	128 (B)	A/F sensor 1 (bank 1)	Input	[Ignition switch: ON]	2.2 V
82 (LG)	128 (B)	A/F sensor 1 (bank 1)	Input	[Engine is running] • Warm-up condition • Engine speed: 2,000 rpm	1.8 V Output voltage varies with air fuel ratio.
83 (SB)	66 (GR)	Power steering pressure sensor	Output	[Engine is running] • Steering wheel: Being turned	0.5 - 4.5 V
				[Engine is running] • Steering wheel: Not being turned	0.4 - 0.8 V
84 (B)	71 (R)	Sensor power supply [Throttle position sensor (bank 1)]	—	[Ignition switch: ON]	5 V
85 (Y)	128 (B)	A/F sensor 1 (bank 2)	Input	[Ignition switch: ON]	2.2 V
86 (O)	128 (B)	A/F sensor 1 (bank 2)	Input	[Engine is running] • Warm-up condition • Engine speed: 2,000 rpm	1.8 V Output voltage varies with air fuel ratio.
87 (R)	68 (B)	Sensor power supply (Crankshaft position sensor)	—	[Ignition switch: ON]	5 V
88 (Y)	62 (O)	Sensor power supply [Camshaft position sensor (bank 2)/ Exhaust valve timing control position sensor (bank 2)]	—	[Ignition switch: ON]	5 V
89 (P)	—	CAN communication line (VVEL control module)	Input/ Output	—	—
90 (G)	66 (GR)	Refrigerant pressure sensor	Input	[Engine is running] • Warm-up condition • Both A/C switch and blower fan motor switch: ON (Compressor operates)	1.0 - 4.0 V
91 (R)	58 (B)	Sensor power supply [Camshaft position sensor (bank 1)/ Exhaust valve timing control position sensor (bank 1)]	—	[Ignition switch: ON]	5 V

Terminal No. (Wire color)		Description		Condition	Value (Approx.)
+	–	Signal name	Input/ Output		
92 (W)	66 (GR)	Sensor power supply (Power steering pressure sensor/ Refrigerant pressure sensor)	—	[Ignition switch: ON]	5 V
93 (LG)	—	CAN communication line (VVEL control module)	Input/ Output	—	—
95 (Y)	70 (B)	Sensor power supply [Battery current sensor/ EVAP control system pressure sensor/ Manifold pressure sensor]	—	[Ignition switch: ON]	5 V
96 (L)	72 (Y)	Sensor power supply [Throttle position sensor (bank 2)]	—	[Ignition switch: ON]	5 V
97 (R)	128 (B)	Engine speed output signal	Output	[Engine is running] • Warm-up condition • Idle speed **NOTE:** The pulse cycle changes depending on rpm at idle	1 V★ 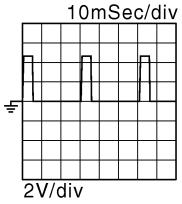 JMBIA0076GB
				[Engine is running] • Engine speed is 2,000 rpm	1 V★ 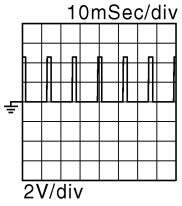 JMBIA0077GB
99 (L)*3 (G)*4	115 (GR)	Sensor power supply (Accelerator pedal position sensor 2)	—	[Ignition switch: ON]	5 V
100 (G)*3 (L)*4	119 (W)	Sensor power supply (Accelerator pedal position sensor 1)	—	[Ignition switch: ON]	5 V
101 (P)	—	CAN communication line	Input/ Output	—	—
102 (SB)	111 (V)	ASCD steering switch	Input	[Ignition switch: ON] • ASCD steering switch: OFF	4 V
				[Ignition switch: ON] • MAIN switch: Pressed	0 V
				[Ignition switch: ON] • CANCEL switch: Pressed	1 V
				[Ignition switch: ON] • RESUME/ACCELERATE switch: Pressed	3 V
				[Ignition switch: ON] • SET/COAST switch: Pressed	2 V

Terminal No. (Wire color)		Description		Condition	Value (Approx.)
+	–	Signal name	Input/ Output		
102 (SB)	111 (V)	ICC steering switch	Input	[Ignition switch: ON] • ICC steering switch: OFF	4.2 V
				[Ignition switch: ON] • MAIN switch: Pressed	0 V
				[Ignition switch: ON] • CANCEL switch: Pressed	1.9 V
				[Ignition switch: ON] • RESUME/ACCELERATE switch: Pressed	3.7 V
				[Ignition switch: ON] • SET/COAST switch: Pressed	3.2 V
				[Ignition switch: ON] • DISTANCE switch: Pressed	2.6 V
				[Ignition switch: ON] • LDP switch: Pressed	1.0 V
104 (R)	119 (W)	Accelerator pedal position sensor 1	Input	[Ignition switch: ON] • Engine: Stopped • Accelerator pedal: Fully released	0.45 - 1.0 V
				[Ignition switch: ON] • Engine: Stopped • Accelerator pedal: Fully depressed	4.4 - 4.8 V
105 (L)	—	CAN communication line	Input/ Output	—	—
106 (L)	128 (B)	Ignition switch	Input	[Ignition switch: OFF]	0 V
				[Ignition switch: ON]	BATTERY VOLTAGE (11 - 14 V)
108 (Y)*3 (P)*4	115 (GR)	Accelerator pedal position sensor 2	Input	[Ignition switch: ON] • Engine: Stopped • Accelerator pedal: Fully released	0.22 - 0.5 V
				[Ignition switch: ON] • Engine: Stopped • Accelerator pedal: Fully depressed	2.1 - 2.5 V
110 (P)	128 (B)	Stop lamp switch	Input	[Ignition switch: OFF] • Brake pedal: Fully released	0 V
				[Ignition switch: OFF] • Brake pedal: Slightly depressed	BATTERY VOLTAGE (11 - 14 V)
111 (V)	—	Sensor ground (ASCD steering switch)	—	—	—
112 (LG)	128 (B)	Fuel pump control module (FPCM) check	Input	[When cranking engine]	0 V
				[Engine is running] • Warm-up condition • Idle speed	4 - 6 V
114 (GR)	—	Data link connector	Input/ Output	—	—
115 (BR)*3 (GR)*4	—	Sensor ground (Accelerator pedal position sensor 2)	—	—	—

Terminal No. (Wire color)		Description		Condition	Value (Approx.)
+	–	Signal name	Input/ Output		
116 (G)	128 (B)	PNP switch	Input	[Ignition switch: ON] • Selector lever: P or N position	BATTERY VOLTAGE (11 - 14 V)
				[Ignition switch: ON] • Selector lever: Except above position	0 V
117 (BR)	128 (B)	ASCD brake switch	Input	[Ignition switch: ON] • Brake pedal: Slightly depressed	0 V
				[Ignition switch: ON] • Brake pedal: Fully released	BATTERY VOLTAGE (11 - 14 V)
118 (R)	128 (B)	Power supply for ECM (Back-up)	Input	[Ignition switch: OFF]	BATTERY VOLTAGE (11 - 14 V)
119 (W)	—	Sensor ground (Accelerator pedal position sensor 1)	—	—	—
120 (W)	128 (B)	Fuel tank temperature sensor	Input	[Engine is running]	0 - 4.8 V Output voltage varies with fuel tank temperature.
121 (GR)	128 (B)	Power supply for ECM	Input	[Ignition switch: ON]	BATTERY VOLTAGE (11 - 14 V)
123 (B)	—	ECM ground	—	—	—
125 (R)	128 (B)	Fuel pump control module (FPCM)	Output	[When cranking engine]	0 - 0.5 V
				[Engine is running] • Warm-up condition • Idle speed	8 - 12 V
127 (LG)	128 (B)	EVAP canister vent control valve	Output	[Ignition switch: ON]	BATTERY VOLTAGE (11 - 14 V)
128 (B)	—	ECM ground	—	—	—

★: Average voltage for pulse signal (Actual pulse signal can be confirmed by oscilloscope.)

*1: This may vary depending on internal resistance of the tester.

**2: Before measuring the terminal voltage, confirm that the battery is fully charged. Refer to PG-3, "How to Handle Battery".

*3: Models with ICC

*4: Models with ASCD

UNIFIED METER AND A/C AMP.

Reference Value

INFOID:0000000003941454

TERMINAL LAYOUT

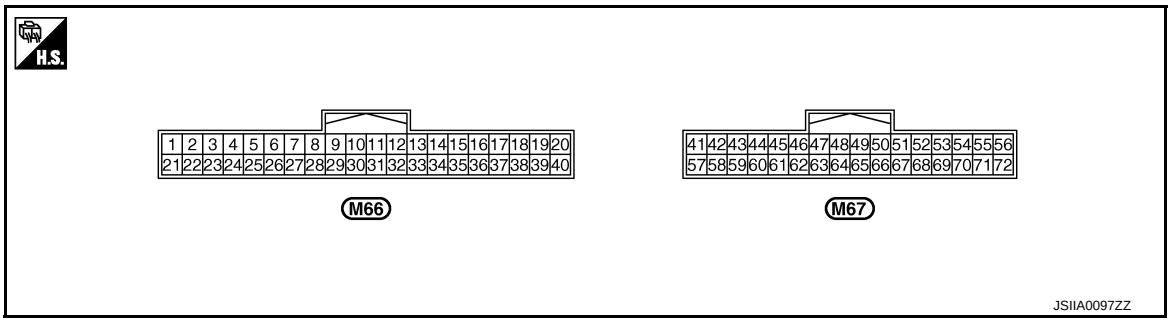

PHYSICAL VALUES

Terminal No. (Wire color)		Description		Condition	Value (Approx.)
+	–	Signal name	Input/ Output		
20* (L)	Ground	ION ON/OFF signal	Output	Blower fan: ON	0 V
				Blower fan: OFF	12 V
38 (L)	Ground	Blower motor control signal	Output	• Ignition switch ON • Blower speed: 1st speed (manual)	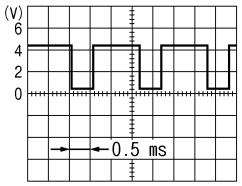 JSIIA0096ZZ
41 (V)	Ground	ACC power supply	—	Ignition switch ACC	Battery voltage
43 (R)	Ground	Intake sensor signal	Input	Ignition switch ON	0 – 4.8 V Output voltage varies with intake temperature.
44 (LG)	Ground	In-vehicle sensor signal	Input	Ignition switch ON	0 – 4.8 V Output voltage varies with in-vehicle temperature.
45 (P)	Ground	Ambient sensor signal	Input	Ignition switch ON	0 – 4.8 V Output voltage varies with ambient temperature.
46 (O)	Ground	Sunload sensor signal	Input	Ignition switch ON	0 – 4.8 V Output voltage varies with amount of sunload.
47* (W)	Ground	Gas sensor signal	Input	**NOTE:** The signal is different by measurement environment of a vehicle	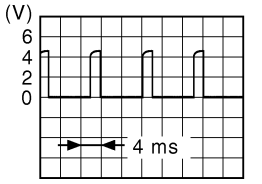 ZJIA1163J
53 (G)	Ground	IGN power supply	—	Ignition switch ON	Battery voltage

Terminal No. (Wire color)		Description		Condition	Value (Approx.)
+	–	Signal name	Input/ Output		
54 (Y)	Ground	BAT power supply	—	Ignition switch OFF	Battery voltage
55 (B)	Ground	Ground	—	Ignition switch ON	0 V
56 (L)	Ground	CAN-H	—	—	—
59 (GR)	Ground	Intake sensor ground	—	Ignition switch ON	0 V
60 (L)	Ground	In-vehicle sensor ground	—	Ignition switch ON	0 V
61 (BR)	Ground	Ambient sensor ground	—	Ignition switch ON	0 V
62 (SB)	Ground	Sunload sensor ground	—	Ignition switch ON	0 V
63* (R)	Ground	Ion control mode output signal	Output	Clean mode	12 V
				Ion control mode	0 V
65 (O)	Ground	ECV (Electrical Control Valve) signal	Output	• Ignition switch ON • Self-diagnosis. STEP-4 (Code No. 45)	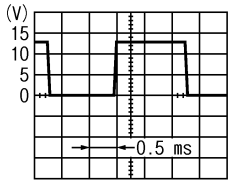 SJIA1607E
69 (L)	Ground	A/C LAN signal	Input/ Output	Ignition switch ON	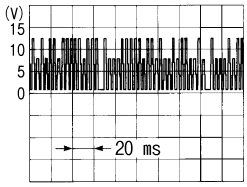 SJIA1453J
70 (R)	Ground	Each door motor power supply	Output	Ignition switch ON	12 V
71 (B)	Ground	Ground	—	Ignition switch ON	0 V
72 (P)	Ground	CAN-L	—	—	—

*: With advanced climate control system (ACCS)

Wiring Diagram - AIR CONDITIONER CONTROL SYSTEM -

INFOID:0000000003941455

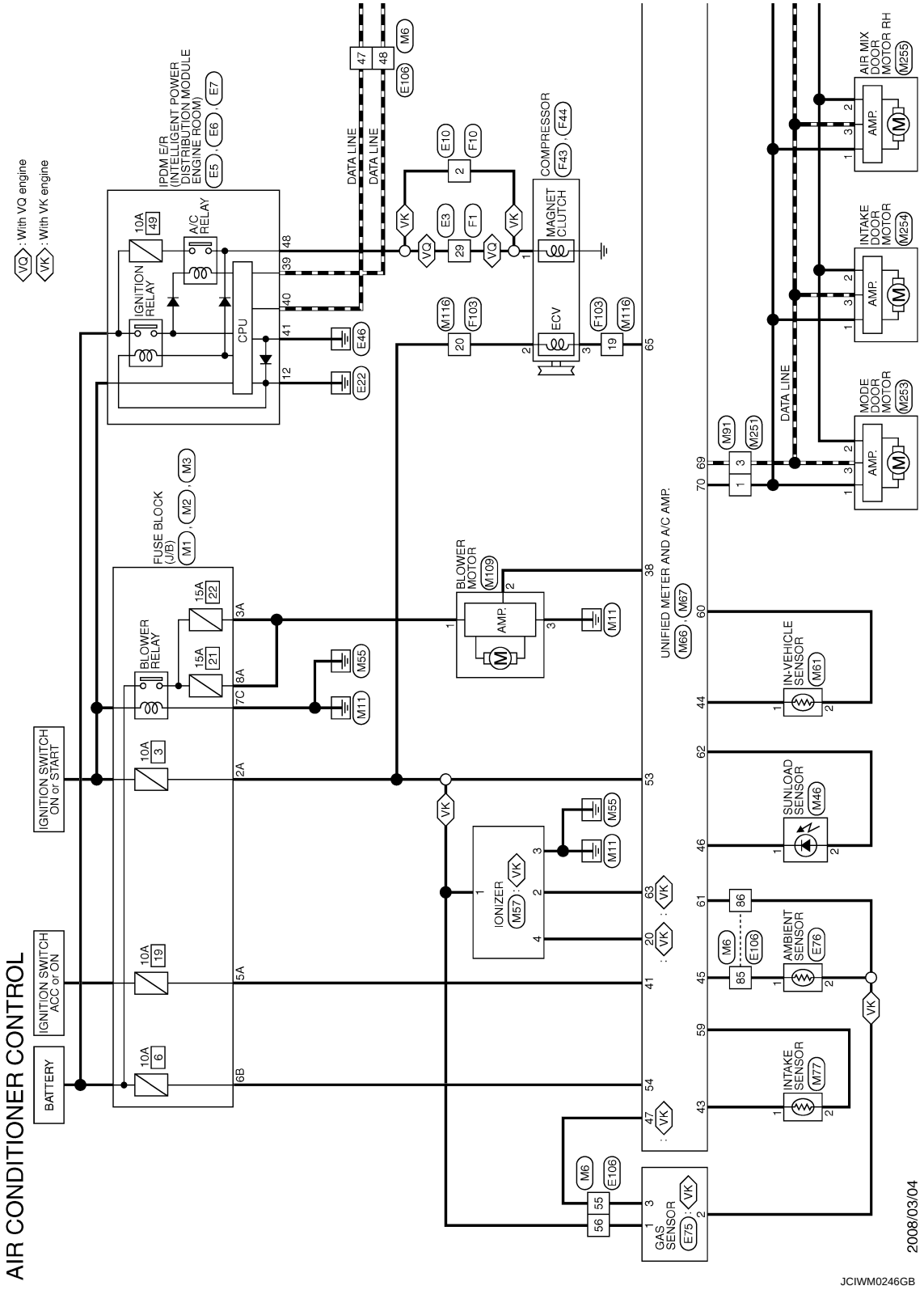

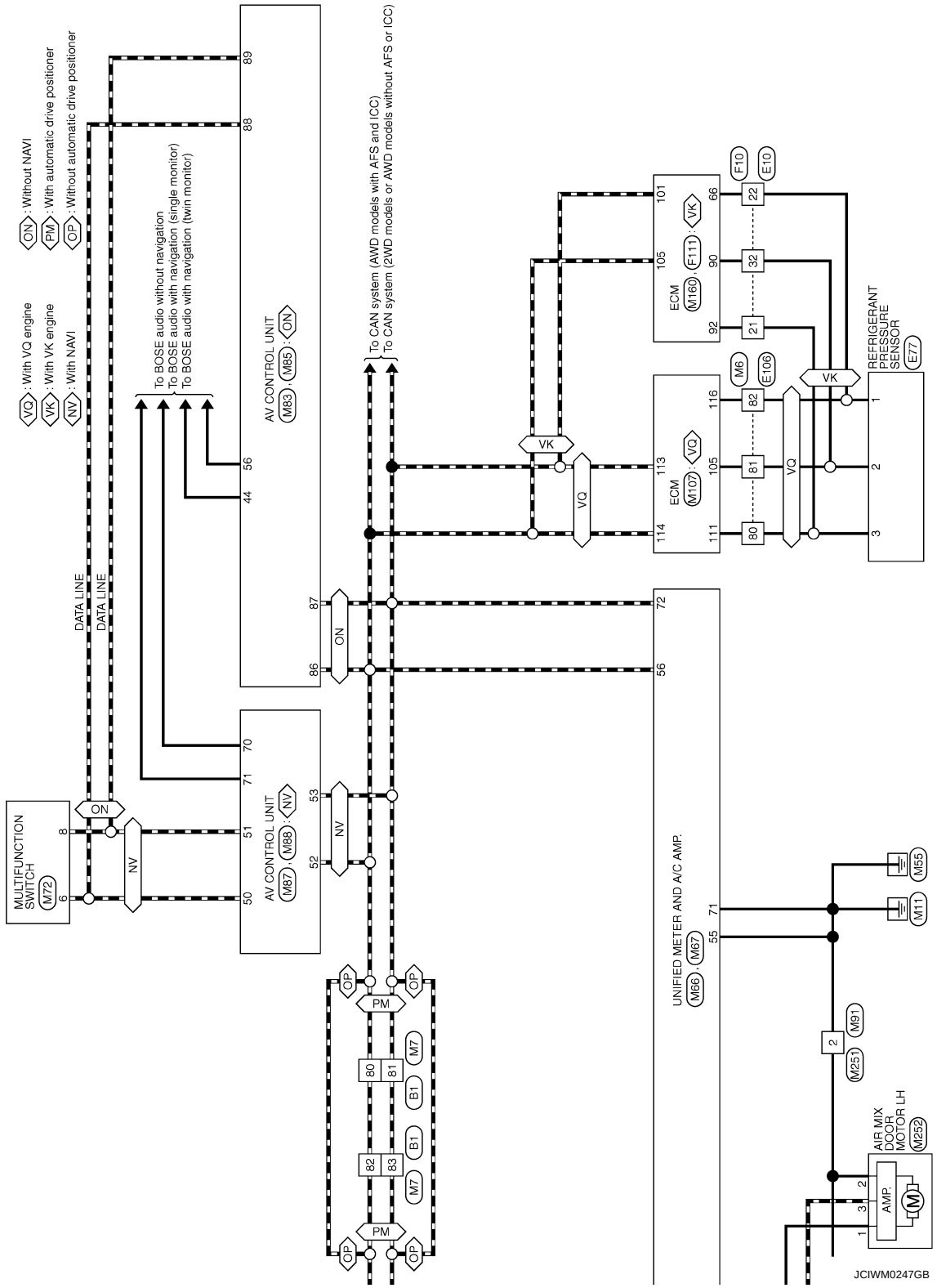
ON : Without NAVI
PM : With automatic drive positioner
OP : Without automatic drive positioner
VQ : With VQ engine
VK : With VK engine
NV : With NAVI
To BOSE audio without navigation
To BOSE audio with navigation (single monitor)
To BOSE audio with navigation (twin monitor)
To CAN system (AWD models with AFS and ICC)
To CAN system (2WD models or AWD models without AFS or ICC)
AV CONTROL UNIT
(M83), (M85) : ON
AV CONTROL UNIT
(M87), (M88) : NV
MULTIFUNCTION SWITCH
M72
DATA LINE
DATA LINE
ECM
(M160), (F111) : VK
ECM
(M107) : VQ
REFRIGERANT PRESSURE SENSOR
E77
UNIFIED METER AND A/C AMP.
(M66), (M67)
AIR MIX DOOR MOTOR LH
M252
AMP.
M55
M11
M91
M251
JCIWM0247GB

AIR CONDITIONER CONTROL

Connector No.	B1
Connector Name	WIRE TO WIRE
Connector Type	TH80FW-CS16-TM4

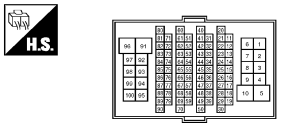

Terminal No.	Color of Wire	Signal Name [Specification]
80	L	–
81	P	–
82	L	–
83	P	–

Connector No.	E3
Connector Name	WIRE TO WIRE
Connector Type	SAA36MB-RS10-SJZ2

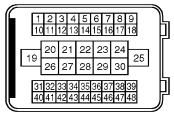

Terminal No.	Color of Wire	Signal Name [Specification]
29	L	–

Connector No.	E5
Connector Name	IPDM E/R (INTELLIGENT POWER DISTRIBUTION MODULE ENGINE ROOM)
Connector Type	TH20FW-CS12-M4-1V

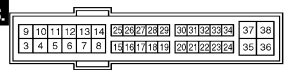

Terminal No.	Color of Wire	Signal Name [Specification]
12	B	–

Connector No.	E6
Connector Name	IPDM E/R (INTELLIGENT POWER DISTRIBUTION MODULE ENGINE ROOM)
Connector Type	TH08FW-NH

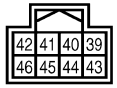

Terminal No.	Color of Wire	Signal Name [Specification]
39	P	–
40	L	–
41	B	–

Connector No.	E7
Connector Name	IPDM E/R (INTELLIGENT POWER DISTRIBUTION MODULE ENGINE ROOM)
Connector Type	TH20FW-CS12-M4

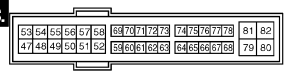

Terminal No.	Color of Wire	Signal Name [Specification]
48	L	–

Connector No.	E10
Connector Name	WIRE TO WIRE
Connector Type	SAA36MB-RS8-SHZ8

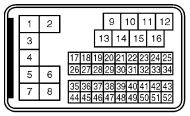

Terminal No.	Color of Wire	Signal Name [Specification]
2	L	–
21	SB	–
22	W	–
32	L	–

Connector No.	E75
Connector Name	GAS SENSOR
Connector Type	RH03FB

Terminal No.	Color of Wire	Signal Name [Specification]
1	Y	AQS POWER
2	P	AQS S GND
3	W	AQS S OUTPUT

Connector No.	E76
Connector Name	AMBIENT SENSOR
Connector Type	RS02FB

Terminal No.	Color of Wire	Signal Name [Specification]
1	G	–
2	P	–

JCIWM0248GB

AIR CONDITIONER CONTROL

Connector No.	E77
Connector Name	REFRIGERANT PRESSURE SENSOR
Connector Type	RK03FB

Terminal No.	Color of Wire	Signal Name [Specification]
1	W	–
2	L	–
3	SB	–

Connector No.	E106
Connector Name	WIRE TO WIRE
Connector Type	TH80FW-CS16-TM4

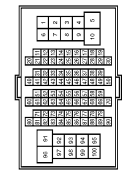

Terminal No.	Color of Wire	Signal Name [Specification]
47	L	–
48	P	–
55	W	–
56	Y	–
80	SB	–
81	L	–
82	W	–
85	G	–
86	P	–

Connector No.	F1
Connector Name	WIRE TO WIRE
Connector Type	SAA36FB-RS10-SJZ2

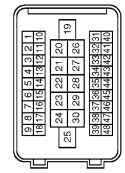

Terminal No.	Color of Wire	Signal Name [Specification]
29	L	–

Connector No.	F10
Connector Name	WIRE TO WIRE
Connector Type	SAA36FB-RS8-SHZ8

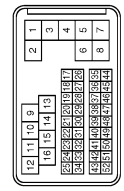

Terminal No.	Color of Wire	Signal Name [Specification]
2	Y	–
21	V	–
22	B	–
32	G	–

Connector No.	F43
Connector Name	COMPRESSOR
Connector Type	RS01FB

Terminal No.	Color of Wire	Signal Name [Specification]
1	L	– [With VQ engine]
1	Y	– [With VK engine]

Connector No.	F44
Connector Name	COMPRESSOR
Connector Type	RK02FGY

Terminal No.	Color of Wire	Signal Name [Specification]
2	Y	–
3	O	–

Connector No.	F103
Connector Name	WIRE TO WIRE
Connector Type	TK36FW-NS10

Terminal No.	Color of Wire	Signal Name [Specification]
19	O	–
20	Y	–

Connector No.	F111
Connector Name	ECM (WITH VK ENGINE)
Connector Type	RH40FBR-RZ8-L-LH-Z

Terminal No.	Color of Wire	Signal Name [Specification]
66	GR	GNDA-PSPRS/PDPRS
90	G	PDPRES
92	W	AVCC-PRES

JCIWM0249GB

AIR CONDITIONER CONTROL

Connector No.	M1
Connector Name	FUSE BLOCK (J/B)
Connector Type	NS06FW-M2

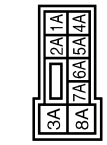

Terminal No.	Color of Wire	Signal Name [Specification]
2A	G	–
3A	L	–
5A	V	–
8A	L	–

Connector No.	M2
Connector Name	FUSE BLOCK (J/B)
Connector Type	NS10FW-CS

Terminal No.	Color of Wire	Signal Name [Specification]
6B	Y	–

Connector No.	M3
Connector Name	FUSE BLOCK (J/B)
Connector Type	NS12FW-CS

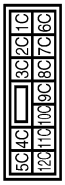

Terminal No.	Color of Wire	Signal Name [Specification]
7C	B	–

Connector No.	M6
Connector Name	WIRE TO WIRE
Connector Type	TH80MW-CS16-TM4

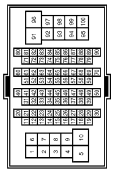

Terminal No.	Color of Wire	Signal Name [Specification]
47	L	–
48	P	–
55	V	–
56	Y	–
80	O	–
81	L	–
82	W	–
85	P	–
86	BR	–

Connector No.	M7
Connector Name	WIRE TO WIRE
Connector Type	TH80MW-CS16-TM4

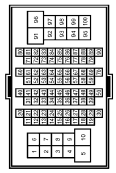

Terminal No.	Color of Wire	Signal Name [Specification]
80	L	–
81	P	–
82	L	–
83	P	–

Connector No.	M46
Connector Name	SUNLOAD SENSOR
Connector Type	K02FB

Terminal No.	Color of Wire	Signal Name [Specification]
1	O	–
2	SB	–

Connector No.	M57
Connector Name	IONIZER
Connector Type	TH04FW-NH

Terminal No.	Color of Wire	Signal Name [Specification]
1	Y	IGN
2	R	ION MODE
3	BR	GND
4	L	ION ON OFF

Connector No.	M61
Connector Name	IN-VEHICLE SENSOR
Connector Type	A02FW

Terminal No.	Color of Wire	Signal Name [Specification]
1	LG	–
2	L	–

JCIWM0250GB

AIR CONDITIONER CONTROL

Connector No.	M66
Connector Name	UNIFIED METER AND A/C AMP.
Connector Type	TH40FW-NH

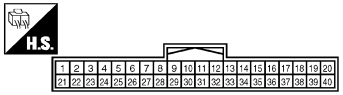

Terminal No.	Color of Wire	Signal Name [Specification]
20	L	ION SENS
38	L	FAN PWM OUT

Connector No.	M67
Connector Name	UNIFIED METER AND A/C AMP.
Connector Type	TH32FW-NH

Terminal No.	Color of Wire	Signal Name [Specification]
41	V	ACC
43	R	INTAKE SENS
44	LG	INCAR SENS
45	P	AMB SENS
46	O	SUN SENS
47	V	GAS SENS
53	G	IGN
54	Y	BAT
55	B	GND
56	L	CAN-H
59	GR	INTAKE SENS GND

60	L	INCAR SENS GND
61	BR	AMB SENS GND
62	SB	SUN SENS GND
63	R	ION MODE
65	O	COMP ECV
69	L	LAN SIG
70	R	VACTR
71	B	GND
72	P	CAN-L

Connector No.	M72
Connector Name	MULTIFUNCTION SWITCH
Connector Type	TH16FW-NH

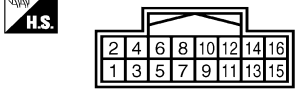

Terminal No.	Color of Wire	Signal Name [Specification]
6	LG	AV COMM (H)
8	V	AV COMM (L)

Connector No.	M77
Connector Name	INTAKE SENSOR
Connector Type	TK04FW

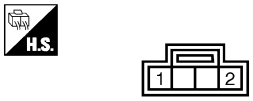

Terminal No.	Color of Wire	Signal Name [Specification]
1	R	–
2	GR	–

Connector No.	M83
Connector Name	AV CONTROL UNIT (WITHOUT NAVI)
Connector Type	TH24FW-NH

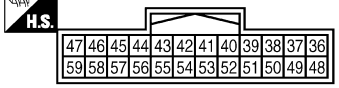

Terminal No.	Color of Wire	Signal Name [Specification]
44	BR	COMM (DISP->CONT)
56	Y	COMM (CONT->DISP)

Connector No.	M85
Connector Name	AV CONTROL UNIT (WITHOUT NAVI)
Connector Type	TH32FW-NH

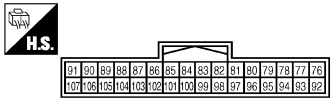

Terminal No.	Color of Wire	Signal Name [Specification]
86	L	CAN-H
87	P	CAN-L
88	LG	AV COMM (H)
89	V	AV COMM (L)

Connector No.	M87
Connector Name	AV CONTROL UNIT (WITH NAVI)
Connector Type	TH40FW-NH

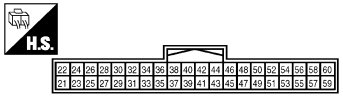

Terminal No.	Color of Wire	Signal Name [Specification]
50	LG	AV COMM (H)
51	V	AV COMM (L)
52	L	CAN-H
53	P	CAN-L

JCIWM0251GB

AIR CONDITIONER CONTROL

Connector No.	M88
Connector Name	AV CONTROL UNIT (WITH NAVI)
Connector Type	TH12FW-NH

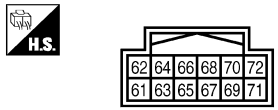

Terminal No.	Color of Wire	Signal Name [Specification]
70	BR	COMM (CONT->DISP)
71	Y	COMM (DISP->CONT)

Connector No.	M91
Connector Name	WIRE TO WIRE
Connector Type	A03MW-P

Terminal No.	Color of Wire	Signal Name [Specification]
1	R	–
2	B	–
3	L	–

Connector No.	M107
Connector Name	ECM (WITH VQ ENGINE)
Connector Type	RH24FGY-RZ8-R-LH-Z

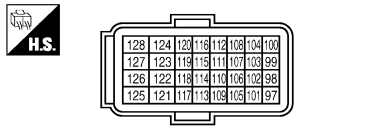

Terminal No.	Color of Wire	Signal Name [Specification]
105	L	PDPRESS
111	O	AVCC-PDPRESS
113	P	VEHCAN-LI
114	L	VEHCAN-HI
116	W	GNDA-PDPRES

Connector No.	M109
Connector Name	BLOWER MOTOR
Connector Type	NS03FW-M3

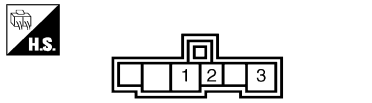

Terminal No.	Color of Wire	Signal Name [Specification]
1	L	–
2	L	–
3	B	–

Connector No.	M116
Connector Name	WIRE TO WIRE
Connector Type	TK36MW-NS10

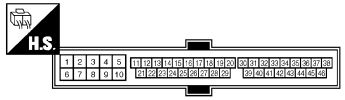

Terminal No.	Color of Wire	Signal Name [Specification]
19	O	–
20	Y	–

Connector No.	M160
Connector Name	ECM (WITH VK ENGINE)
Connector Type	RH24FGY-RZ8-R-LH-Z

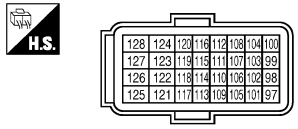

Terminal No.	Color of Wire	Signal Name [Specification]
101	P	VEHCAN-L
105	L	VEHCAN-H

Connector No.	M251
Connector Name	WIRE TO WIRE
Connector Type	A03FW

Terminal No.	Color of Wire	Signal Name [Specification]
1	L	–
2	B	–
3	L	–

Connector No.	M252
Connector Name	AIR MIX DOOR MOTOR LH
Connector Type	A03FW

Terminal No.	Color of Wire	Signal Name [Specification]
1	L	–
2	B	–
3	L	–

JCIWM0252GB

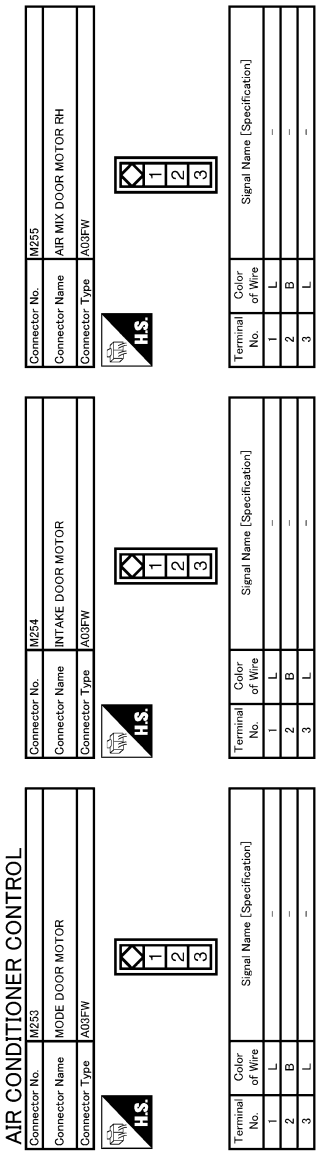

JCIWM0253GB

Fail-safe

INFOID:0000000003941456

FAIL-SAFE FUNCTION

- If a communication error exists between the unified meter and A/C amp., and the AV control unit and preset switch for 30 seconds or longer, air conditioner is controlled under the following conditions:

Compressor	**: ON**
Air outlet	**: AUTO**
Air inlet	**: FRE (Fresh)**
Blower fan speed	**: AUTO**
Set temperature	**: Setting before communication error occurs**

SYMPTOM DIAGNOSIS

AIR CONDITIONER CONTROL

Diagnosis Chart By Symptom

INFOID:0000000003941462

Symptom	Reference	
A/C system does not activate.	Go to Trouble Diagnosis Procedure for A/C System.	HAC-70, "Diagnosis Procedure"
A/C system cannot be controlled.	Go to Preset Switch System.	AV-241, "Symptom Table" (WITHOUT NAVIGATION), AV-565, "Symptom Table" [NAVIGATION (SINGLE MONITOR)] or AV-1028, "Symptom Table" [NAVIGATION (TWIN MONITOR)]
Air outlet does not change. Mode door motor does not operate normally.	Go to Trouble Diagnosis Procedure for Mode Door Motor. (LAN)	HAC-71, "Diagnosis Procedure"
Discharge air temperature (driver side) does not change. Air mix door motor (driver side) does not operate normally.	Go to Trouble Diagnosis Procedure for Air Mix Door Motor (driver side). (LAN)	HAC-73, "Diagnosis Procedure"
Discharge air temperature (passenger side) does not change. Air mix door motor (passenger side) does not operate normally.	Go to Trouble Diagnosis Procedure for Air Mix Door Motor (passenger side). (LAN)	HAC-75, "Diagnosis Procedure"
Intake door does not change. Intake door motor does not operate normally.	Go to Trouble Diagnosis Procedure for Intake Door Motor. (LAN)	HAC-77, "WITHOUT ACCS : Diagnosis Procedure" (WITHOUT ACCS) or HAC-79, "WITH ACCS : Diagnosis Procedure" (WITH ACCS)
Blower motor operation is malfunctioning.	Go to Trouble Diagnosis Procedure for Blower Motor.	HAC-81, "Diagnosis Procedure"
Magnet clutch does not engage.	Go to Trouble Diagnosis Procedure for Magnet Clutch.	HAC-85, "Diagnosis Procedure"
Insufficient cooling No cool air comes out. (Air flow volume is normal.)	Go to Trouble Diagnosis Procedure for Insufficient Cooling.	HAC-154, "Inspection procedure"
Insufficient heating No warm air comes out. (Air flow volume is normal.)	Go to Trouble Diagnosis Procedure for Insufficient Heating.	HAC-156, "Inspection procedure"
Noise	Go to Trouble Diagnosis Procedure for Noise.	HAC-158, "Inspection procedure"
Self-diagnosis cannot be performed.	Go to Trouble Diagnosis Procedure for Self-diagnosis.	HAC-160, "Inspection procedure"
Memory function does not operate.	Go to Trouble Diagnosis Procedure for Memory Function.	HAC-161, "Inspection procedure"
Plasmacluster system does not operate.*	Go to Trouble Diagnosis Procedure for Plasmacluster system.	HAC-162, "Inspection procedure"

*: With advanced climate control system (ACCS)

INSUFFICIENT COOLING

Description

INFOID:0000000003894155

Symptom
- Insufficient cooling
- No cool air comes out. (Air flow volume is normal.)

Inspection procedure

INFOID:0000000003894156

1. CHECK WITH A GAUGE OF RECOVERY/RECYCLING RECHARGING EQUIPMENT

Connect the recovery/recycling recharging equipment to the vehicle and perform the pressure inspection with the gauge.

Is there refrigerant?

YES >> GO TO 2.
NO-1 >> Check for refrigerant leakages with the refrigerant leakage detecting fluorescent leak detector. Refer to HA-34, "Inspection".
NO-2 >> GO TO 2 after repairing or replacing the parts according to the inspection results.

2. CHECK CHARGED REFRIGERANT AMOUNT

1. Connect recovery/recycling recharging equipment to the vehicle and discharge the refrigerant. Refer to HA-25, "Collection and Charge".
2. Recharge with the proper amount of refrigerant. Refer to HA-25, "Collection and Charge".
3. Perform the inspection with the refrigerant leakage detecting fluorescent leak detector. Refer to HA-34, "Inspection".

Is the inspection result normal?

YES >> GO TO 3.
NO >> Refill the refrigerant and repair or replace the parts according to the inspection results.

3. PERFORM THE PERFORMANCE TEST

Connect recovery/recycling recharging equipment to the vehicle and perform the performance test. Refer to HA-32, "Performance Chart" (VQ35HR) or HA-88, "Performance Chart" (VK50VE).

Is the inspection result normal?

YES >> GO TO 4.
NO >> Perform the diagnosis with the gauge pressure. Refer to HA-8, "Trouble Diagnosis For Unusual Pressure".

4. CHECK SETTING OF TEMPERATURE SETTING TRIMMER

Check the setting of temperature setting trimmer. Refer to HAC-6, "WITHOUT ACCS : Temperature Setting Trimmer" (WITHOUT ACCS) or HAC-11, "WITH ACCS : Temperature Setting Trimmer" (WITH ACCS).

1. Check that the temperature setting trimmer is set to “+ direction”.
   NOTE:
   The control temperature can be set with the setting of temperature setting trimmer.
2. Set temperature control dial to “0”.

Are the symptoms solved?

YES >> INSPECTION END
NO >> GO TO 5.

5. PERFORM SELF-DIAGNOSIS

Perform self-diagnosis function. Refer to HAC-56, "WITHOUT ACCS : Diagnosis Description" (WITHOUT ACCS) or HAC-62, "WITH ACCS : Diagnosis Description" (WITH ACCS).

Is the inspection result normal?

YES >> GO TO 6.
NO >> Repair or replace parts according to the inspection results.

6. CHECK DRIVE BELT

Check tension of the drive belt. Refer to EM-15, "Checking" (VQ35HR) or EM-163, "Checking" (VK50VE).

Is the inspection result normal?

YES >> GO TO 7.
NO >> Adjust or replace drive belt.

7. CHECK AIR LEAKAGE FROM DUCT

Check duct and nozzle, etc. of A/C system for air leakage.

Is the inspection result normal?

YES >> GO TO 8.
NO >> Repair or replace parts according to the inspection results.

8. CHECK ECV

Perform the ECV diagnosis procedure. Refer to HAC-87, "Diagnosis Procedure".

Is the inspection result normal?

YES >> Replace the unified meter and A/C amp.
NO >> Replace the compressor.

INSUFFICIENT HEATING

Description

INFOID:0000000003894157

Symptom
- Insufficient heating
- No warm air comes out. (Air flow volume is normal.)

Inspection procedure

INFOID:0000000003894158

1. CHECK COOLING SYSTEM

1. Check engine coolant level and check for leakage. Refer to CO-8, "Inspection" (VQ35HR) or CO-33, "Inspection" (VK50VE).
2. Check radiator cap. Refer to CO-12, "RADIATOR CAP : Inspection" (VQ35HR) or CO-37, "RADIATOR CAP : Inspection" (VK50VE).
3. Check water flow sounds of engine coolant. Refer to CO-9, "Refilling" (VQ35HR) or CO-34, "Refilling" (VK50VE).

Is the inspection result normal?

YES >> GO TO 2.
NO >> Refill the engine coolant and repair or replace the parts according to the inspection results.

2. CHECK SETTING OF TEMPERATURE SETTING TRIMMER

1. Check the setting of temperature setting trimmer. Refer to HAC-6, "WITHOUT ACCS : Temperature Setting Trimmer" (WITHOUT ACCS) or HAC-11, "WITH ACCS : Temperature Setting Trimmer" (WITH ACCS).
2. Check that the temperature setting trimmer is set to “– direction”.
   NOTE:
   The control temperature can be set with the setting of temperature setting trimmer.
3. Set temperature control dial to “0”.

Are the symptoms solved?

YES >> Perform the setting separately if necessary. INSPECTION END.
NO >> GO TO 3.

3. CHECK OPERATION

1. Turn temperature dial (driver side) and raise temperature setting to 32.0°C (90°F) after warming up the engine.
2. Check that warm air blows from outlets.

Is the inspection result normal?

YES >> INSPECTION END
NO >> GO TO 4.

4. PERFORM SELF-DIAGNOSIS

Perform self-diagnosis function. Refer to HAC-56, "WITHOUT ACCS : Diagnosis Description" (WITHOUT ACCS) or HAC-62, "WITH ACCS : Diagnosis Description" (WITH ACCS).

Is the inspection result normal?

YES >> GO TO 5.
NO >> Repair or replace parts according to the inspection results.

5. CHECK AIR LEAKAGE FROM DUCT

Check duct and nozzle, etc. of A/C system for air leakage.

Is the inspection result normal?

YES >> GO TO 6.
NO >> Repair or replace parts according to the inspection results.

6. CHECK HEATER HOSE INSTALLATION CONDITION

Check the heater hose installation condition visually (for twist, crush, etc.).

Is the inspection result normal?

YES >> GO TO 7.
NO >> Repair or replace parts according to the inspection results.

7. CHECK TEMPERATURE OF HEATER HOSE

1. Check the temperature of inlet hose and outlet hose of heater core.
2. Check that the inlet side of heater core is hot and the outlet side is slightly lower than/almost equal to the inlet side.

   CAUTION:
   The temperature inspection should be performed in a short time because the engine coolant temperature is too hot.

Is the inspection result normal?

YES >> GO TO 8.
NO >> Replace the heater core after performing the procedures after the cooling system inspection again. GO TO 1.

8. REPLACE HEATER CORE

Replace the heater core. Refer to HA-51, "Exploded View".

Are the symptoms solved?

YES >> INSPECTION END
NO >> Perform the procedures after the cooling system inspection again. GO TO 1.

NOISE

Description

INFOID:0000000003894159

Symptom
- Noise
- Noise is heard when the A/C system operates.

Inspection procedure

INFOID:0000000003894160

1. CHECK OPERATION

1. Operate the A/C system and check the operation. Refer to HAC-5, "WITHOUT ACCS : Description & Inspection" (WITHOUT ACCS) or HAC-8, "WITH ACCS : Description & Inspection" (WITH ACCS).
2. Check the parts where noise is occurring.

Can the parts where noise is occurring be checked?

YES-1 >> Noise from blower motor: GO TO 2.
YES-2 >> Noise from compressor: GO TO 3.
YES-3 >> Noise from expansion valve: GO TO 4.
YES-4 >> Noise from A/C piping (pipe, flexible hose): GO TO 6.
YES-5 >> Noise from drive belt: GO TO 7.
NO >> INSPECTION END

2. CHECK BLOWER MOTOR

1. Remove blower motor.
2. Remove in-cabin microfilter.
3. Remove foreign materials that are in the blower unit.
4. Check the noise from blower motor again.

Is the inspection result normal?

YES >> INSPECTION END
NO >> Replace blower motor.

3. REPLACE COMPRESSOR

1. Correct the refrigerant with recovery/recycling recharging equipment.
2. Recharge with the proper amount of the collected refrigerant after recycling or new refrigerant.
3. Check for the noise from compressor again.

Is the inspection result normal?

YES >> INSPECTION END
NO >> Replace compressor.

4. CHECK WITH GAUGE PRESSURE

Perform the diagnosis with the gauge pressure. Refer to HA-8, "Trouble Diagnosis For Unusual Pressure".

Is the inspection result normal?

YES >> GO TO 5.
NO >> Repair or replace malfunctioning part(s).

5. REPLACE EXPANSION VALVE

1. Correct the refrigerant with recovery/recycling recharging equipment.
2. Recharge with the proper amount of the collected refrigerant after recycling or new refrigerant.
3. Check for the noise from expansion valve again.

Are the symptoms solved?

YES >> INSPECTION END
NO >> Replace expansion valve.

6. CHECK A/C PIPING (PIPE, FLEXIBLE HOSE)

1. Check A/C piping (pipe, flexible hose) (for deformation and damage, etc.).
2. Check the installation condition of clips and brackets, etc. of A/C piping (pipe, flexible hose).

Is the inspection result normal?

YES >> Fix the line with rubber or come vibration absorbing material.
NO >> Repair or replace parts according to the inspection results.

7. CHECK DRIVE BELT

Check tension of the drive belt. Refer to EM-15, "Checking" (VQ35HR) or EM-163, "Checking" (VK50VE).

Is the inspection result normal?

YES >> Check the noise from compressor: GO TO 3.
NO >> Adjust or replace drive belt according to the inspection results.

SELF-DIAGNOSIS CANNOT BE PERFORMED

Description

INFOID:0000000003894161

Symptom: Self-diagnosis function does not operate normally.

Inspection procedure

INFOID:0000000003894162

1. CHECK SELF-DIAGNOSIS FUNCTION

1. Turn ignition switch ON.
2. Set in self-diagnosis mode as per the following. Within 10 seconds after starting engine (ignition switch is turned ON.), press OFF switch for at least 5 seconds.

NOTE:

- If battery voltage drops below 12 V during diagnosis STEP-3, door motor speed becomes slower and as a result, the system may generate an error even when operation is normal. Start engine before performing this diagnosis to avoid this.
- Former STEP-1 (indicators and display screen are checked) does not exist in this self-diagnosis function.
- OFF switch may not be recognized according to the timing of pressing it. Operate OFF switch after the intake switch indicators are turned ON.

Does self-diagnosis function operate?

YES >> INSPECTION END
NO >> GO TO 2.

2. CHECK POWER SUPPLY AND GROUND CIRCUIT OF UNIFIED METER AND A/C AMP.

Check power supply and ground circuit of unified meter and A/C amp. Refer to HAC-69, "UNIFIED METER AND A/C AMP. : Diagnosis Procedure".

Is the inspection result normal?

YES >> Replace unified meter and A/C amp.
NO >> Repair or replace malfunctioning part(s).

MEMORY FUNCTION DOES NOT OPERATE

Description

INFOID:0000000003894163

Symptom
- Memory function does not operate normally.
- The setting is not maintained. (It returns to the initial condition.)

Inspection procedure

INFOID:0000000003894164

1. CHECK OPERATION

1. Set temperature control dial to 32.0°C (90°F).
2. Press OFF switch.
3. Turn ignition switch OFF.
4. Turn ignition switch ON.
5. Press AUTO switch.
6. Check that the set temperature is maintained.

Is the inspection result normal?

YES >> INSPECTION END
NO >> GO TO 2.

2. CHECK POWER SUPPLY AND GROUND CIRCUIT OF UNIFIED METER AND A/C AMP

Check power supply and ground circuit of unified meter and A/C amp. Refer to HAC-69, "UNIFIED METER AND A/C AMP. : Diagnosis Procedure".

Is the inspection result normal?

YES >> Replace unified meter and A/C amp.
NO >> Repair or replace malfunctioning part(s).

PLASMACLUSTER SYSTEM DOES NOT OPERATE

Description

INFOID:0000000003941457

Symptom: Plasmacluster system does not operate.

Inspection procedure

INFOID:0000000003941458

FUNCTION CONFIRMATION PROCEDURE

Check the plasmacluster operation in the function inspection.

1. CHECK PLASMACLUSTER ION CONTROL FUNCTION

1. Turn ignition switch OFF and restart the engine.
2. Ion indicator (blue) is shown on the display.
3. Press OFF switch.
4. Ion indicator is turned OFF.

Is the inspection result normal?

YES >> GO TO 2.
NO >> GO TO 3.

2. CHECK ION CONTROL MODE

1. Turn ignition switch OFF and restart the engine.
2. Press AUTO switch. AUTO INTAKE indicator turns ON (auto intake mode).
3. Ion indicator (blue) is shown on the display.
4. Ion indicator (blue) changes to ion indicator (green) after approximately 30 minutes.
5. Ion indicator (green) changes to ion indicator (blue) after approximately 15 minutes.
6. Press intake switch. AUTO INTAKE indicator and REC indicator turns OFF (fixed FRE mode).
7. Ion indicator (green) changes to ion indicator (blue) after approximately 15 minutes.
8. Ion indicator (blue) changes to ion indicator (green) after approximately 15 minutes.

Is the inspection result normal?

YES >> GO TO 3.
NO >> Replace unified meter and A/C amp.

3. PERFORM SELF-DIAGNOSIS

Perform self-diagnosis function STEP-4. Refer to HAC-62, "WITH ACCS : Diagnosis Description".

Code No.	41	42	43	44	45	46
Ionizer	ON	ON	ON	ON	ON	OFF
Ion indicator	ION	ION	CLEAN	CLEAN	ION	OFF

Does plasmacluster system change according to each code No.?

YES >> INSPECTION END
NO-1 >> Ionizer operation is malfunctioning. Refer to HAC-104, "Diagnosis Procedure".
NO-2 >> Ion indicator does not change. Replace unified meter and A/C amp.
NO-3 >> Ion indicator does not illuminate. Refer to AV-241, "Symptom Table" (WITHOUT NAVIGATION), AV-565, "Symptom Table" [NAVIGATION (SINGLE MONITOR)] or AV-1028, "Symptom Table" [NAVIGATION (TWIN MONITOR)].

PRECAUTION

PRECAUTIONS

Precaution for Supplemental Restraint System (SRS) "AIR BAG" and "SEAT BELT PRE-TENSIONER"

INFOID:0000000003894180

The Supplemental Restraint System such as “AIR BAG” and “SEAT BELT PRE-TENSIONER”, used along with a front seat belt, helps to reduce the risk or severity of injury to the driver and front passenger for certain types of collision. This system includes seat belt switch inputs and dual stage front air bag modules. The SRS system uses the seat belt switches to determine the front air bag deployment, and may only deploy one front air bag, depending on the severity of a collision and whether the front occupants are belted or unbelted.
Information necessary to service the system safely is included in the “SRS AIR BAG” and “SEAT BELT” of this Service Manual.

WARNING:
- **To avoid rendering the SRS inoperative, which could increase the risk of personal injury or death in the event of a collision which would result in air bag inflation, all maintenance must be performed by an authorized NISSAN/INFINITI dealer.**
- **Improper maintenance, including incorrect removal and installation of the SRS, can lead to personal injury caused by unintentional activation of the system. For removal of Spiral Cable and Air Bag Module, see the “SRS AIR BAG”.**
- **Do not use electrical test equipment on any circuit related to the SRS unless instructed to in this Service Manual. SRS wiring harnesses can be identified by yellow and/or orange harnesses or harness connectors.**

PRECAUTIONS WHEN USING POWER TOOLS (AIR OR ELECTRIC) AND HAMMERS

WARNING:
- **When working near the Air Bag Diagnosis Sensor Unit or other Air Bag System sensors with the ignition ON or engine running, DO NOT use air or electric power tools or strike near the sensor(s) with a hammer. Heavy vibration could activate the sensor(s) and deploy the air bag(s), possibly causing serious injury.**
- **When using air or electric power tools or hammers, always switch the ignition OFF, disconnect the battery, and wait at least 3 minutes before performing any service.**

Precaution Necessary for Steering Wheel Rotation after Battery Disconnect

INFOID:0000000003894181

NOTE:
- Before removing and installing any control units, first turn the push-button ignition switch to the LOCK position, then disconnect both battery cables.
- After finishing work, confirm that all control unit connectors are connected properly, then re-connect both battery cables.
- Always use CONSULT-III to perform self-diagnosis as a part of each function inspection after finishing work. If a DTC is detected, perform trouble diagnosis according to self-diagnosis results.

This vehicle is equipped with a push-button ignition switch and a steering lock unit.
If the battery is disconnected or discharged, the steering wheel will lock and cannot be turned.
If turning the steering wheel is required with the battery disconnected or discharged, follow the procedure below before starting the repair operation.

OPERATION PROCEDURE

1. Connect both battery cables.
   NOTE:
   Supply power using jumper cables if battery is discharged.
2. Turn the push-button ignition switch to ACC position.
   (At this time, the steering lock will be released.)
3. Disconnect both battery cables. The steering lock will remain released with both battery cables disconnected and the steering wheel can be turned.
4. Perform the necessary repair operation.

5. When the repair work is completed, re-connect both battery cables. With the brake pedal released, turn the push-button ignition switch from ACC position to ON position, then to LOCK position. (The steering wheel will lock when the push-button ignition switch is turned to LOCK position.)
6. Perform self-diagnosis check of all control units using CONSULT-III.

Precaution for Procedure without Cowl Top Cover

INFOID:0000000003894182

When performing the procedure after removing cowl top cover, cover the lower end of windshield with urethane, etc.

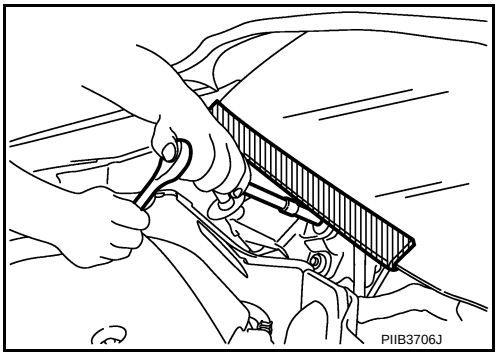

Working with HFC-134a (R-134a)

INFOID:0000000003894184

CAUTION:

- **CFC-12 (R-12) refrigerant and HFC-134a (R-134a) refrigerant are not compatible. Compressor malfunction is likely to occur if the refrigerants are mixed, refer to "CONTAMINATED REFRIGERANT" below. To determine the purity of HFC-134a (R-134a) in the vehicle and recovery tank, use Refrigerant recovery/recycling recharging equipment and Refrigerant Identifier.**
- **Use only specified lubricant for the HFC-134a (R-134a) A/C system and HFC-134a (R-134a) components. Compressor malfunction is likely to occur if lubricant other than that specified is used.**
- **The specified HFC-134a (R-134a) lubricant rapidly absorbs moisture from the atmosphere. The following handling precautions must be observed:**

- **Cap (seal) immediately the component to minimize the entry of moisture from the atmosphere when removing refrigerant components from a vehicle.**
- **Never remove the caps (unseal) until just before connecting the components when installing refrigerant components to a vehicle. Connect all refrigerant loop components as quickly as possible to minimize the entry of moisture into system.**
- **Use only the specified lubricant from a sealed container. Reseal immediately containers of lubricant. Lubricant becomes moisture saturated and should not be used without proper sealing.**
- **Never allow lubricant (NISSAN A/C System Oil Type S) to come in contact with styrene foam parts. Damage may result.**

CONTAMINATED REFRIGERANT

Take appropriate steps shown below if a refrigerant other than pure HFC-134a (R-134a) is identified in a vehicle:

- Explain to the customer that environmental regulations prohibit the release of contaminated refrigerant into the atmosphere.
- Explain that recovery of the contaminated refrigerant could damage service equipment and refrigerant supply.
- Suggest the customer return the vehicle to the location of previous service where the contamination may have occurred.
- In case of repairing, recover the refrigerant using only **dedicated equipment and containers. Never recover contaminated refrigerant into the existing service equipment.** Contact a local refrigerant product retailer for available service if the facility does not have dedicated recovery equipment. This refrigerant must be disposed of in accordance with all federal and local regulations. In addition, replacement of all refrigerant system components on the vehicle is recommended.
- The air conditioner warranty is void if the vehicle is within the warranty period. Please contact Nissan Customer Affairs for further assistance.

General Refrigerant Precaution

INFOID:0000000003894185

WARNING:

- **Never breath A/C refrigerant and lubricant vapor or mist. Exposure may irritate eyes, nose and throat. Remove HFC-134a (R-134a) from the A/C system, using certified service equipment meeting**

requirements of SAE J-2210 [HFC-134a (R-134a) recycling equipment], or J-2209 [HFC-134a (R-134a) recovery equipment]. Ventilate work area before resuming service if accidental system discharge occurs. Additional health and safety information may be obtained from refrigerant and lubricant manufacturers.

- **Never release refrigerant into the air. Use approved recovery/recycling recharging equipment to capture the refrigerant each time an air conditioning system is discharged.**
- **Wear always eye and hand protection (goggles and gloves) when working with any refrigerant or air conditioning system.**
- **Never store or heat refrigerant containers above 52°C (126°F).**
- **Never heat a refrigerant container with an open flame; Place the bottom of the container in a warm pail of water if container warming is required.**
- **Never intentionally drop, puncture, or incinerate refrigerant containers.**
- **Keep refrigerant away from open flames: poisonous gas is produced if refrigerant burns.**
- **Refrigerant displaces oxygen, therefore be certain to work in well ventilated areas to prevent suffocation.**
- **Never pressure test or leakage test HFC-134a (R-134a) service equipment and/or vehicle air conditioning systems with compressed air during repair. Some mixtures of air and HFC-134a (R-134a) have been shown to be combustible at elevated pressures. These mixtures, if ignited, may cause injury or property damage. Additional health and safety information may be obtained from refrigerant manufacturers.**

Refrigerant Connection

INFOID:0000000003894186

A new type refrigerant connection has been introduced to all refrigerant lines except the following location.
- Expansion valve to evaporator
- Refrigerant pressure sensor to liquid tank

ABOUT ONE-TOUCH JOINT

Description
- One-touch joints are pipe joints which do not require tools during piping connection.
- Unlike conventional connection methods using union nuts and flanges, controlling tightening torque at connection point is not necessary.
- Use a disconnector when removing a pipe joint.

COMPONENT PARTS

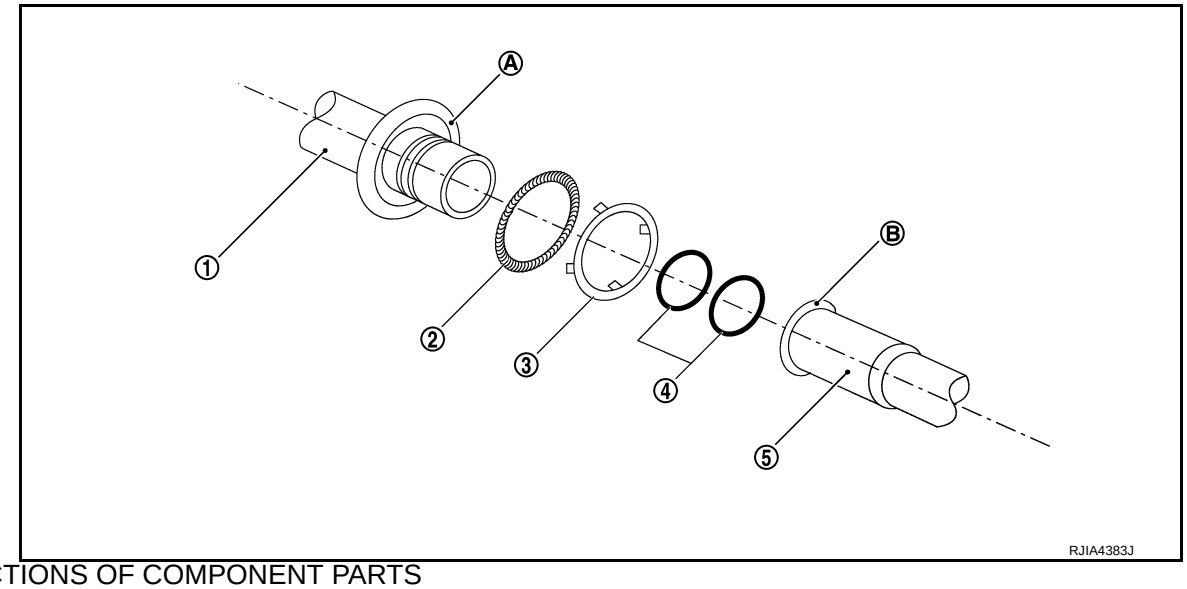

FUNCTIONS OF COMPONENT PARTS

1	Pipe (Male-side)	• Retains O-rings. • Retains garter spring in cage (A).
2	Garter spring	Anchors female-side piping.
3	Indicator ring	When connection is made properly, this is ejected from male-side piping. (This part is no longer necessary after connection.)

4	O-ring	Seals connection point. (Not reusable)
5	Pipe (Female-side)	• Seals connection by compressing O-rings. • Anchors piping connection using flare (B) and garter spring.

NOTE:
- Garter spring cannot be removed from cage of male-side piping.
- Indicator ring remains near piping connection point, however, this is not a malfunction. (This is to check piping connection during factory assembly.)

REMOVAL

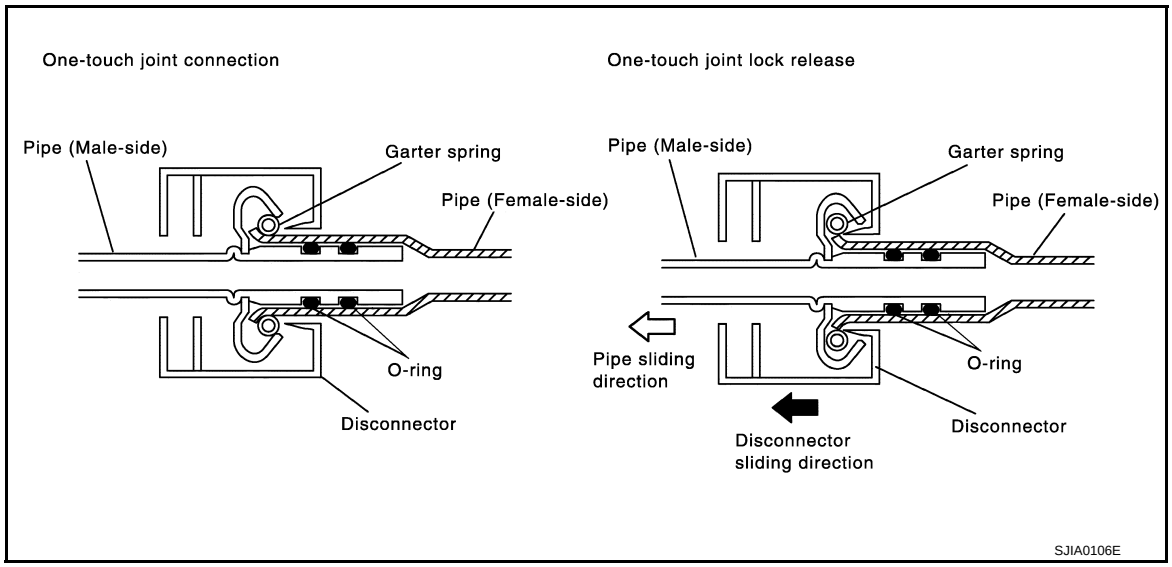

1. Clean piping connection point, and set a disconnector.
2. Slide disconnector in axial direction of piping, and stretch garter spring with tapered point of disconnector.
3. Slide disconnector farther so that inside diameter of garter spring becomes larger than outside diameter of female-side piping flare. Then male-side piping can be disconnected.

INSTALLATION

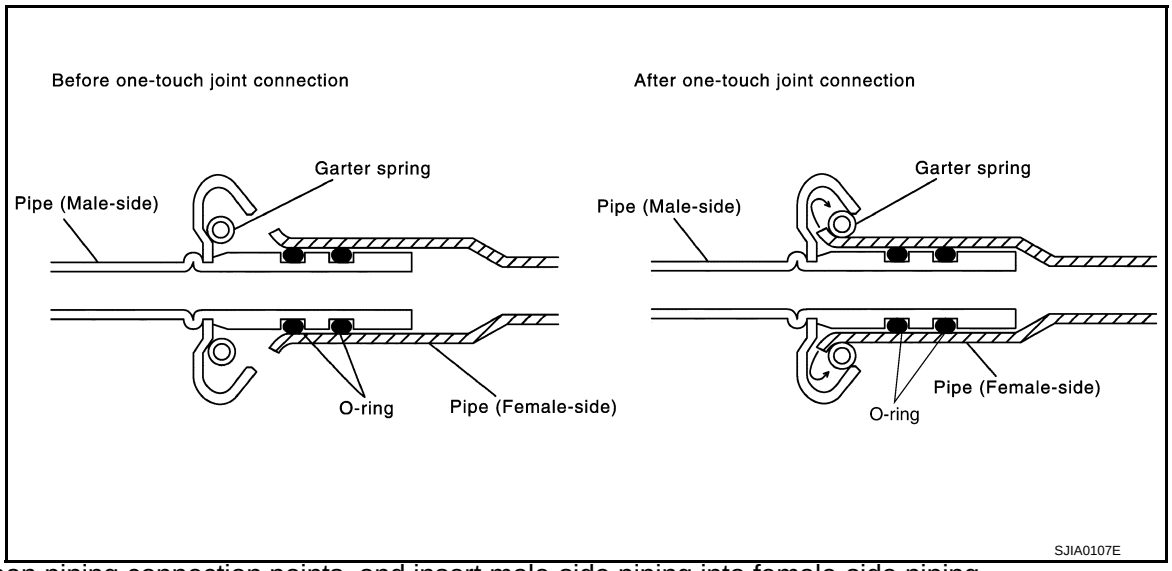

1. Clean piping connection points, and insert male-side piping into female-side piping.
2. Push inserted male-side piping harder so that female-side piping flare stretches garter spring.
3. Garter spring seats on flare if inside diameter of garter spring becomes larger than outside diameter of female-side piping flare. Then, it fits in between male-side piping cage and female-side piping flare to anchor piping connection point.

   NOTE:
   When garter spring seats on flare, and fits in between male-side piping cage and female-side piping flare, it clicks.

   CAUTION:

- **Female-side piping connection point is thin and easy to deform. Slowly insert the male-side piping straight in axial direction.**
- **Insert piping securely until a click is heard.**
- **After piping connection is completed, pull male-side piping by hand to make sure that connection does not come loose.**

O-RING AND REFRIGERANT CONNECTION

VQ35HR

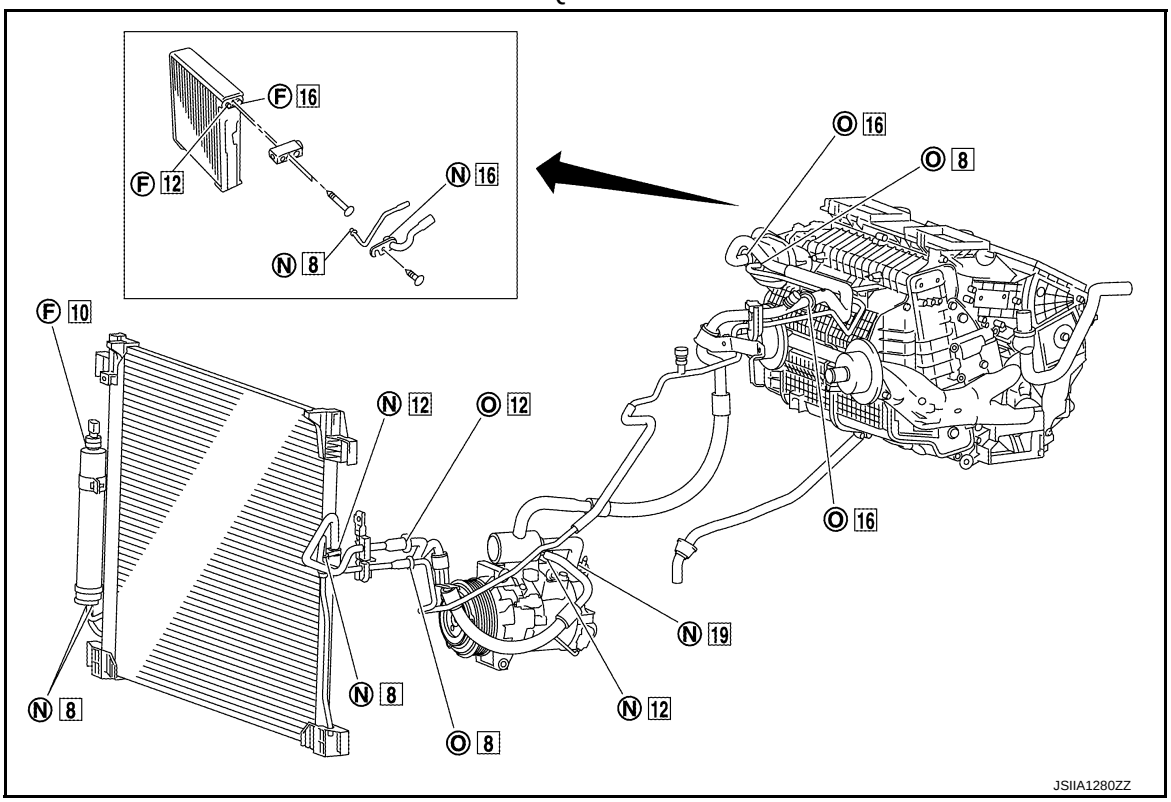

F. Former type refrigerant connection N. New type refrigerant connection O. One-touch joint

□: O-ring size

VK50VE

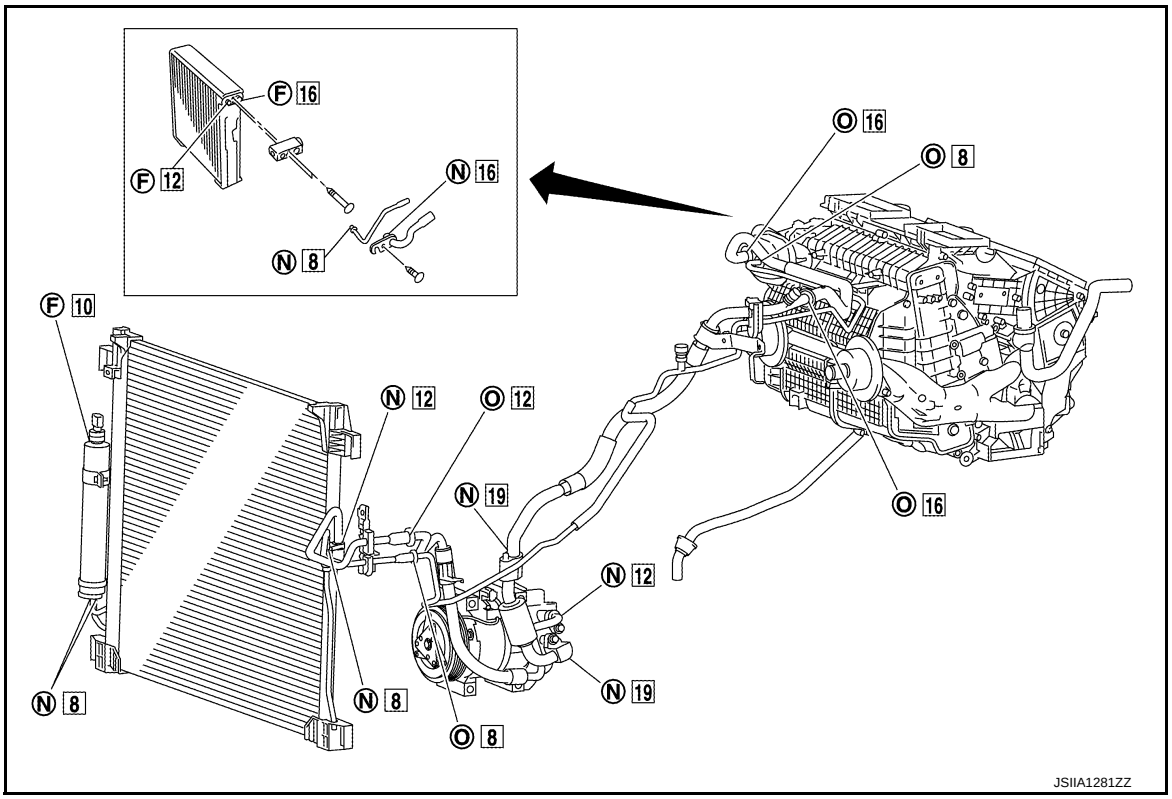

F. Former type refrigerant connection N. New type refrigerant connection O. One-touch joint

□: O-ring size

CAUTION:

The new and former refrigerant connections use different O-ring configurations. Never confuse O-rings since they are not interchangeable. Refrigerant may leak at the connection if a wrong O-ring is installed.

O-Ring Part Numbers and Specifications

Connection type	Piping connection point		Part number	QTY	O-ring size
One-touch joint	Low-pressure pipe 1 to low-pressure pipe 2		92473 N8221	2	16
	Low-pressure flexible hose to low-pressure pipe 2		92473 N8221	2	16
	High-pressure pipe 1 to high-pressure pipe 2		92471 N8221	2	8
	Condenser pipe assembly to high-pressure flexible hose		92472 N8221	2	12
	Condenser pipe assembly to high-pressure pipe 1		92471 N8221	2	8
New	Condenser to condenser pipe assembly	Inlet	92472 N8210	1	12
		Outlet	92471 N8210	1	8
	Low-pressure pipe 1 to expansion valve		92473 N8210	1	16
	High-pressure pipe 2 to expansion valve		92471 N8210	1	8
	Low-pressure flexible hose to low-pressure pipe 3 (VK50VE)		92474 N8210	1	19
	Compressor to low-pressure pipe 3 (VK50VE)		92474 N8210	1	19
	Compressor to low-pressure flexible hose (VQ35HR)		92474 N8210	1	19
	Compressor to high-pressure flexible hose		92472 N8210	1	12
	Liquid tank to Condenser	Inlet	92471 N8210	1	8
		Outlet		1	

Connection type	Piping connection point		Part number	QTY	O-ring size
Former	Refrigerant pressure sensor to liquid tank		J2476 89956	1	10
	Expansion valve to evaporator	Inlet	92475 71L00	1	12
		Outlet	92475 72L00	1	16

WARNING:
Check that all refrigerant is discharged into the recycling equipment and the pressure in the system is less than atmospheric pressure. Then gradually loosen the discharge side hose fitting and remove it.

CAUTION:
Observe the following when replacing or cleaning refrigerant cycle components.
- **Store it in the same way at it is when mounted on the car when the compressor is removed. Failure to do so will cause lubricant to enter the low-pressure chamber.**
- **Use always a torque wrench and a back-up wrench when connecting tubes.**
- **Plug immediately all openings to prevent entry of dust and moisture after disconnecting tubes.**
- **Connect the pipes at the final stage of the operation when installing an air conditioner in the vehicle. Never remove the seal caps of pipes and other components until just before required for connection.**
- **Allow components stored in cool areas to warm to working area temperature before removing seal caps. This prevents condensation from forming inside A/C components.**
- **Remove thoroughly moisture from the refrigeration system before charging the refrigerant.**
- **Replace always used O-rings.**
- **Apply lubricant to circle of the O-rings shown in illustration when connecting tube. Be careful not to apply lubricant to threaded portion.**

Name : NISSAN A/C System Oil Type S

- **O-ring must be closely attached to the groove portion of tube.**
- **Be careful not to damage O-ring and tube when replacing the O-ring.**
- **Connect tube until a click can be heard. Then tighten the nut or bolt by hand. Check that the O-ring is installed to tube correctly.**
- **Perform leakage test and make sure that there is no leakage from connections after connecting line. Disconnect that line and replace the O-ring when the refrigerant leaking point is found. Then tighten connections of seal seat to the specified torque.**

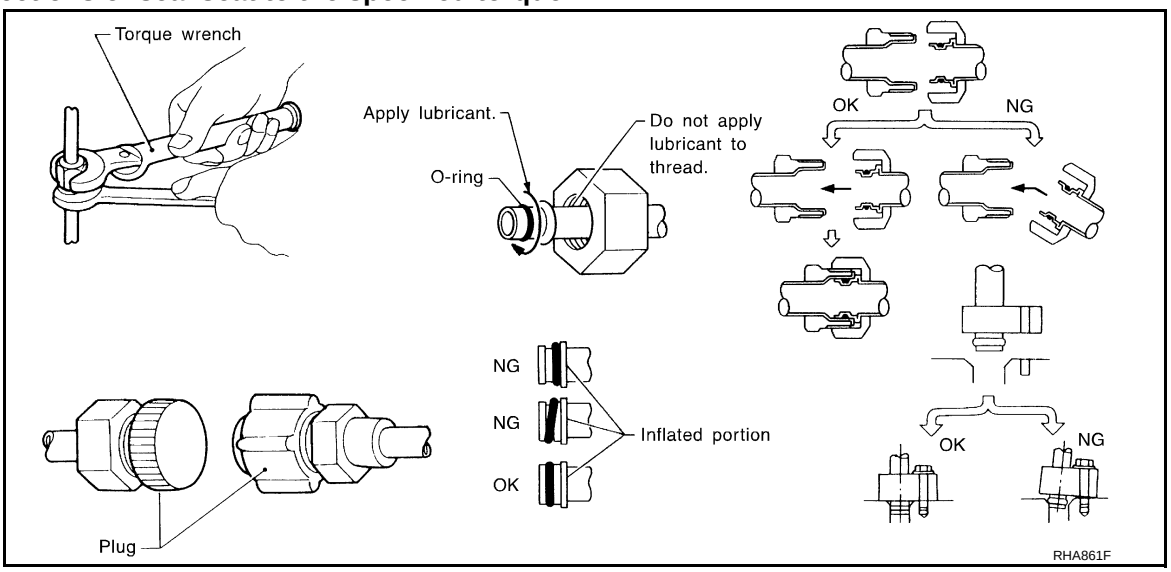

Service Equipment

INFOID:0000000003894187

RECOVERY/RECYCLING RECHARGING EQUIPMENT

Be certain to follow the manufacturer's instructions for machine operation and machine maintenance. Never introduce any refrigerant other than that specified into the machine.

ELECTRICAL LEAK DETECTOR

Be certain to follow the manufacturer's instructions for tester operation and tester maintenance.

VACUUM PUMP

The lubricant contained inside the vacuum pump is not compatible with the specified lubricant for HFC-134a (R-134a) A/C systems. The vent side of the vacuum pump is exposed to atmospheric pressure. So the vacuum pump lubricant may migrate out of the pump into the service hose. This is possible when the pump is switched OFF after evacuation (vacuuming) and hose is connected to it.
To prevent this migration, use a manual valve placed near the hose-to-pump connection, as per the following.

- Vacuum pumps usually have a manual isolator valve as part of the pump. Close this valve to isolate the service hose from the pump.
- Use a hose equipped with a manual shut-off valve near the pump end for pumps without an isolator. Close the valve to isolate the hose from the pump.
- Disconnect the hose from the pump if the hose has an automatic shut-off valve. As long as the hose is connected, the valve is open and lubricating oil may migrate.

Some one-way valves open when vacuum is applied and close under no vacuum condition. Such valves may restrict the pump's ability to pull a deep vacuum and are not recommended.

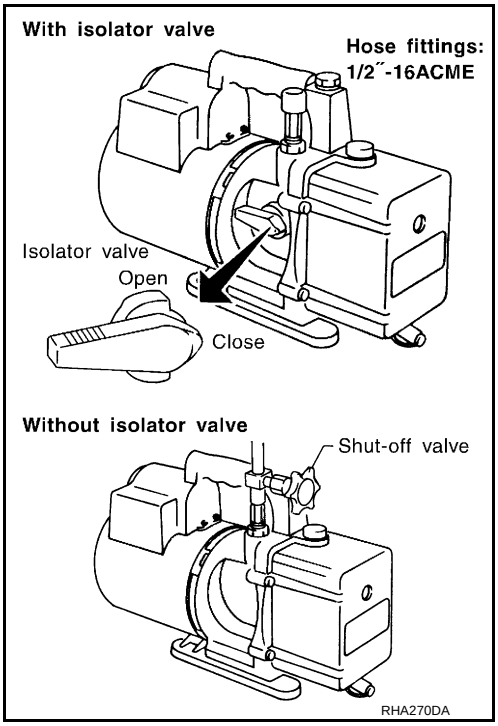

MANIFOLD GAUGE SET

Be certain that the gauge face indicates HFC-134a or R-134a. Be sure the gauge set has 1/2″-16 ACME threaded connections for service hoses. Confirm the set has been used only with refrigerant HFC-134a (R-134a) and specified lubricants.

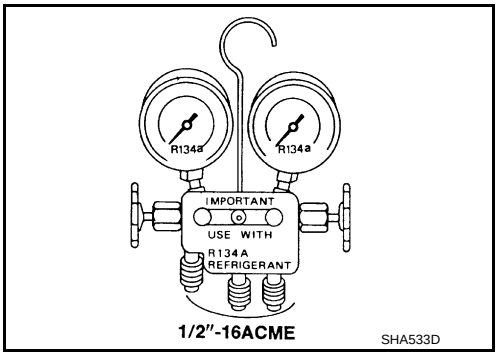

SERVICE HOSES

Be certain that the service hoses display the markings described (colored hose with black stripe). All hoses must equip positive shut-off devices (either manual or automatic) near the end of the hoses opposite to the manifold gauge.

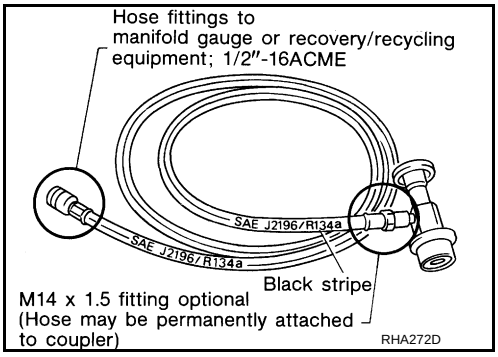

SERVICE COUPLERS

Never attempt to connect HFC-134a (R-134a) service couplers to the CFC-12 (R-12) A/C system. The HFC-134a (R-134a) couplers do not properly connect to the CFC-12 (R-12) system. However, if an improper connection is attempted, discharging and contamination may occur.

Shut-off valve rotation	A/C service valve
Clockwise	Open
Counterclockwise	Close

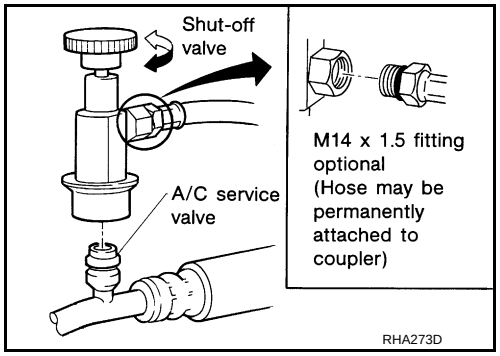

REFRIGERANT WEIGHT SCALE

Verify that no refrigerant other than HFC-134a (R-134a) and specified lubricants have been used with the scale. The hose fitting must be 1/2″-16 ACME if the scale controls refrigerant flow electronically.

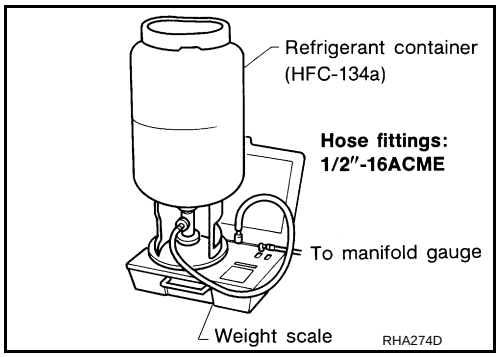

CHARGING CYLINDER

Using a charging cylinder is not recommended. Refrigerant may be vented into air from cylinder's top valve when filling the cylinder with refrigerant. Also, the accuracy of the cylinder is generally less than that of an electronic scale or of quality recycle/recharge equipment.

COMPRESSOR

General Precautions

INFOID:0000000003894188

CAUTION:

- **Plug all openings to prevent moisture and foreign matter from entering.**
- **Store it in the same way at it is when mounted on the car when the compressor is removed.**
- **Follow “Maintenance of Lubricant Quantity in Compressor” exactly when replacing or repairing compressor. Refer to HA-29, "Maintenance of Lubricant Quantity".**
- **Keep friction surfaces between clutch and pulley clean. Wipe it off by using a clean waste cloth moistened with thinner if the surface is contaminated with lubricant.**
- **Turn the compressor shaft by hand more than five turns in both directions after compressor service operation. This distributes equally lubricant inside the compressor. Let the engine idle and operate the compressor for one hour after the compressor is installed.**
- **Apply voltage to the new one and check for normal operation after replacing the compressor magnet clutch.**

LEAK DETECTION DYE

General Precautions

INFOID:0000000003894189

CAUTION:

- **The A/C system contains a fluorescent leak detection dye used for locating refrigerant leakages. An ultraviolet (UV) lamp is required to illuminate the dye when inspecting for leakages.**
- **Wear always fluorescence enhancing UV safety goggles to protect eyes and enhance the visibility of the fluorescent dye.**
- **The fluorescent dye leak detector is not a replacement for an electrical leak detector (SST: J-41995). The fluorescent dye leak detector should be used in conjunction with an electrical leak detector (SST: J-41995) to pin-point refrigerant leakages.**
- **Read and follow all manufacture's operating instructions and precautions prior to performing the work for the purpose of safety and customer's satisfaction.**
- **A compressor shaft seal should not necessarily be repaired because of dye seepage. The compressor shaft seal should only be repaired after confirming the leakage with an electrical leak detector (SST: J-41995).**
- **Remove always any remaining dye from the leakage area after repairs are completed to avoid a misdiagnosis during a future service.**
- **Never allow dye to come into contact with painted body panels or interior components. Clean immediately with the approved dye cleaner if dye is spilled. Fluorescent dye left on a surface for an extended period of time cannot be removed.**
- **Never spray the fluorescent dye cleaning agent on hot surfaces (engine exhaust manifold, etc.).**
- **Never use more than one refrigerant dye bottle [1/4 ounce (7.4 cc)] per A/C system.**
- **Leak detection dyes for HFC-134a (R-134a) and CFC-12 (R-12) A/C systems are different. Never use HFC-134a (R-134a) leak detection dye in CFC-12 (R-12) A/C system, or CFC-12 (R-12) leak detection dye in HFC-134a (R-134a) A/C system, or A/C system damage may result.**
- **The fluorescent properties of the dye remains for three or more years unless a compressor malfunction occurs.**

IDENTIFICATION

NOTE:

Vehicles with factory installed fluorescent dye have a green label.
Vehicles without factory installed fluorescent dye have a blue label.

IDENTIFICATION LABEL FOR VEHICLE

Vehicles with factory installed fluorescent dye have the identification label on the front side of hood.

PREPARATION

PREPARATION

Special Service Tool

INFOID:0000000003958607

The actual shapes of Kent-Moore tools may differ from those of special service tools illustrated here.

HFC-134a (R-134a) Service Tool and Equipment

- Never mix HFC-134a (R-134a) refrigerant and/or its specified lubricant with CFC-12 (R-12) refrigerant and/or its lubricant.
- Separate and non-interchangeable service equipment must be used for handling each type of refrigerant/lubricant.
- Refrigerant container fittings, service hose fittings and service equipment fittings (equipment which handles refrigerant and/or lubricant) are different between CFC-12 (R-12) and HFC-134a (R-134a). This is to avoid mixed use of the refrigerants/lubricant.
- Never use adapters that convert one size fitting to another: refrigerant/lubricant contamination occurs and compressor malfunction may result.

Tool number (Kent-Moore No.) Tool name		Description
9253089908 (for high-pressure pipe 1) (-) 9253089912 (for high-pressure flexible hose) (-) 9253089916 (for low-pressure pipe 2 and low-pressure flexible hose) (-) Disconnector tool set (J-45815)	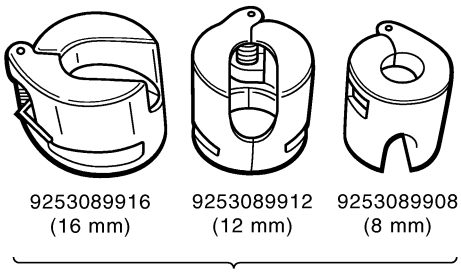	Disconnect one-touch joint connection
(ACR2005-NI) ACR5 A/C Service Center	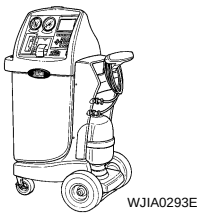	Function: Refrigerant recovery, recycling and recharging
(J-41995) Electrical leak detector	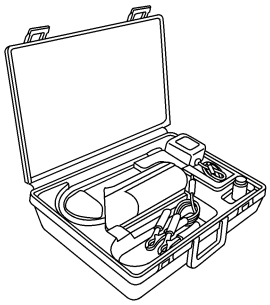	Power supply: DC 12 V (Battery terminal)

Tool number (Kent-Moore No.) Tool name		Description
(J-43926) Refrigerant dye leak detection kit Kit includes: (J-42220) UV lamp and UV safety goggles (J-41459) HFC-134a (R-134a) dye injector Use with J-41447, 1/4 ounce bottle (J-41447) HFC-134a (R-134a) fluorescent leak detection dye (Box of 24, 1/4 ounce bottles) (J-43872) Refrigerant dye cleaner	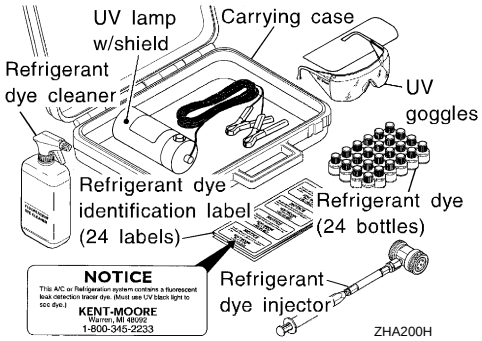	Power supply: DC 12 V (Battery terminal)
(J-42220) UV lamp and UV safety goggles	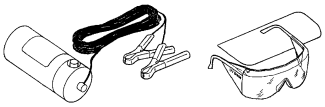	Power supply: DC 12 V (Battery terminal) For checking refrigerant leakage when fluorescent dye is equipped in A/C system Includes: UV lamp and UV safety goggles
(J-41447) HFC-134a (R-134a) fluorescent leak detection dye (Box of 24, 1/4 ounce bottles)	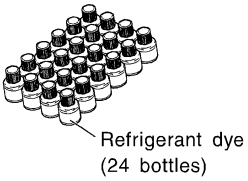	Application: For HFC-134a (R-134a) PAG oil Container: 1/4 ounce (7.4 cc) bottle (Includes self-adhesive dye identification labels for affixing to vehicle after charging system with dye.)
(J-41459) HFC-134a (R-134a) dye injector Use with J-41447, 1/4 ounce bottle	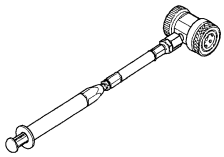	For injecting 1/4 ounce of fluorescent leak detection dye into A/C system
(J-43872) Refrigerant dye cleaner		For cleaning dye spills

Tool number (Kent-Moore No.) Tool name		Description
(J-39183) Manifold gauge set (with hoses and couplers)	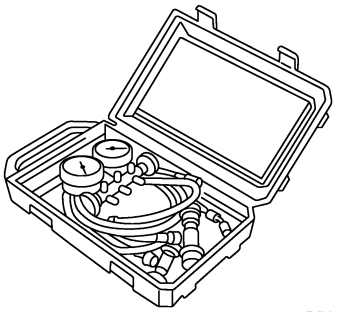 RJIA0196E	Identification: • The gauge face indicates HFC-134a (R-134a). Fitting size: Thread size • 1/2″-16 ACME
Service hoses • High-pressure side hose (J-39501-72) • Low-pressure side hose (J-39502-72) • Utility hose (J-39476-72)	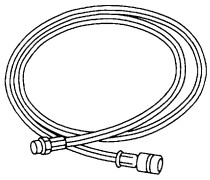 S-NT201	Hose color: • Low-pressure side hose: Blue with black stripe • High-pressure side hose: Red with black stripe • Utility hose: Yellow with black stripe or green with black stripe Hose fitting to gauge: • 1/2″-16 ACME
Service couplers • High-pressure side coupler (J-39500-20) • Low-pressure side coupler (J-39500-24)	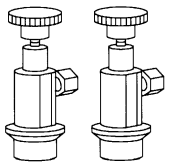 S-NT202	Hose fitting to service hose: M14 x 1.5 fitting is optional or permanently attached.
(J-39650) Refrigerant weight scale	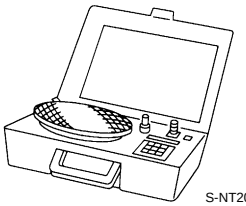 S-NT200	For measuring of refrigerant Fitting size: Thread size 1/2″-16 ACME
(J-39649) Vacuum pump (Including the isolator valve)	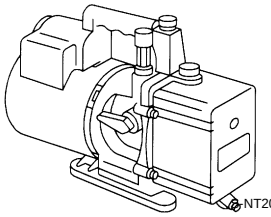 S-NT203	Capacity: • Air displacement: 4 CFM • Micron rating: 20 microns • Oil capacity: 482 g (17 oz.) Fitting size: Thread size • 1/2″-16 ACME

Commercial Service Tool

INFOID:0000000003958608

Tool name		Description
Refrigerant identifier equipment	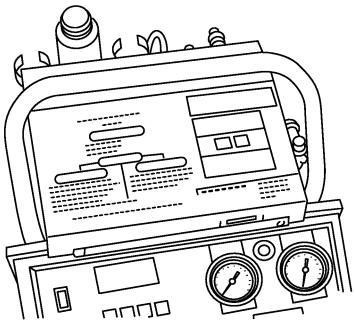 RJIA0197E	Checking for refrigerant purity and system contamination
Power tool	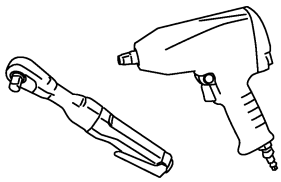 PBIC0190E	For loosening bolts and nuts

Sealant or/and Lubricant

INFOID:0000000003958609

HFC-134a (R-134a) Service Tool and Equipment

- Never mix HFC-134a (R-134a) refrigerant and/or its specified lubricant with CFC-12 (R-12) refrigerant and/or its lubricant.
- Separate and non-interchangeable service equipment must be used for handling each type of refrigerant/lubricant.
- Refrigerant container fittings, service hose fittings and service equipment fittings (equipment which handles refrigerant and/or lubricant) are different between CFC-12 (R-12) and HFC-134a (R-134a). This is to avoid mixed use of the refrigerants/lubricant.
- Never use adapters that convert one size fitting to another: refrigerant/lubricant contamination occurs and compressor malfunction may result.

Tool name		Description
HFC-134a (R-134a) refrigerant	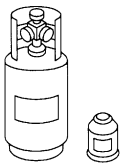 S-NT196	Container color: Light blue Container marking: HFC-134a (R-134a) Fitting size: Thread size • Large container 1/2″-16 ACME
NISSAN A/C System Oil Type S (DH-PS)	 S-NT197	Type: Polyalkylene glycol oil (PAG), type S (DH-PS) Application: HFC-134a (R-134a) swash plate compressors (NISSAN only) Capacity: 40 m ℓ (1.4 US fl oz., 1.4 Imp fl oz.)

REMOVAL AND INSTALLATION

PRESET SWITCH

Exploded View

INFOID:0000000003941592

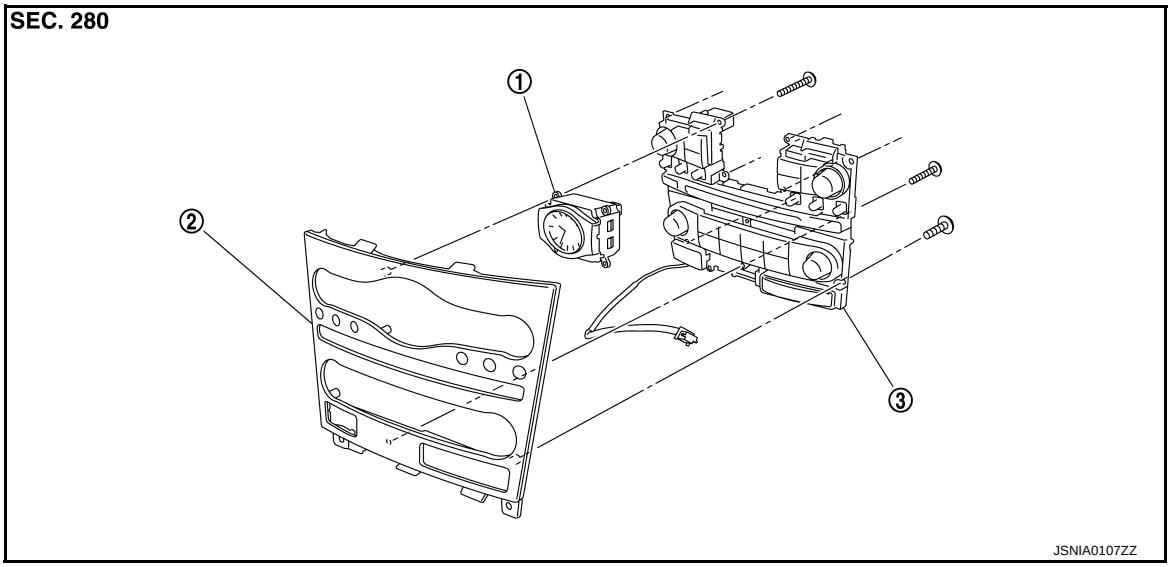

1. Clock
2. Cluster lid C
3. Preset switch

Removal and Installation

INFOID:0000000003941593

REMOVAL

Refer to AV-263, "Removal and Installation" (WITHOUT NAVIGATION), AV-590, "Removal and Installation" [NAVIGATION (SINGLE MONITOR)], AV-1059, "Removal and Installation" [NAVIGATION (TWIN MONITOR)].

INSTALLATION

Installation is basically the reverse order of removal.

UNIFIED METER AND A/C AMP.

Exploded View

INFOID:0000000003941594

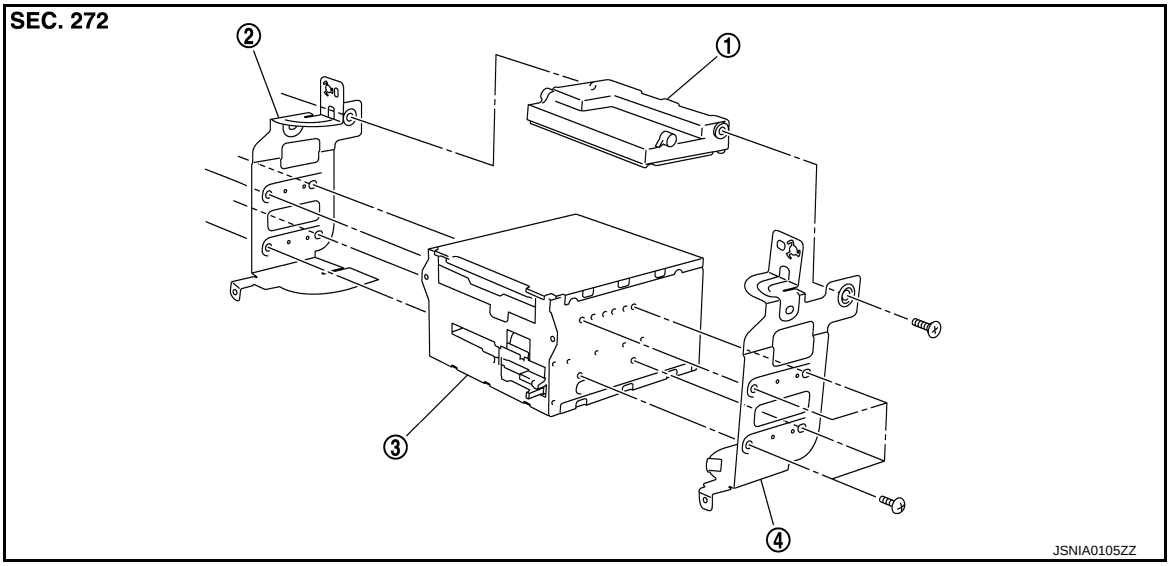

1. Unified meter and A/C amp.
2. Bracket (LH)
3. AV control unit
4. Bracket (RH)

Removal and Installation

INFOID:0000000003941595

REMOVAL

1. Remove AV control unit. Refer to AV-251, "Exploded View" (WITHOUT NAVIGATION), AV-579, "Exploded View" [NAVIGATION (SINGLE MONITOR)], AV-1045, "Exploded View" [NAVIGATION (TWIN MONITOR)].
2. Remove mounting screws (A), and then remove unified meter and A/C amp. (1).

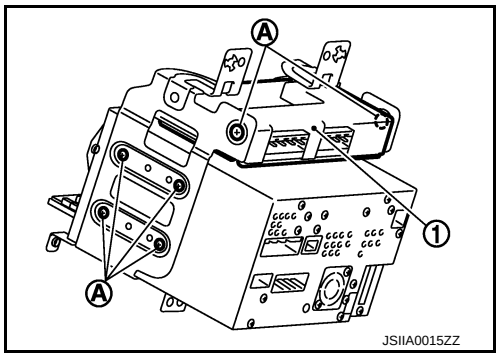

INSTALLATION

Installation is basically the reverse order of removal.

CAUTION:

Since unified meter and A/C amp. connector and AV control unit connector have the same form, be careful not to insert them wrongly.

AMBIENT SENSOR

Exploded View

INFOID:0000000003941596

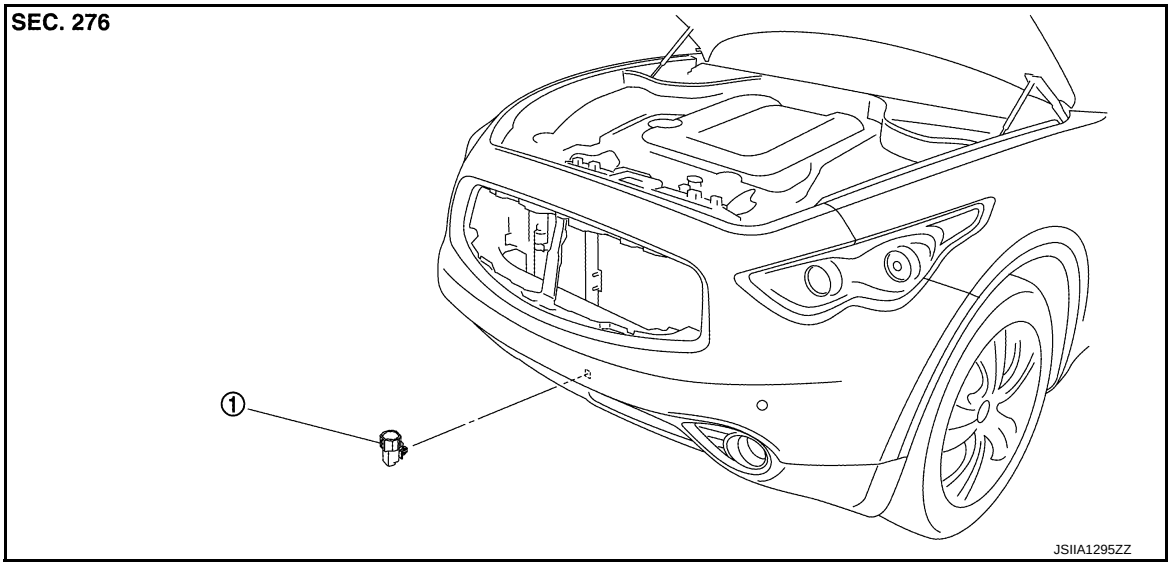

1. Ambient sensor

Removal and Installation

INFOID:0000000003941597

REMOVAL

1. Remove air duct (inlet). Refer to EM-29, "Exploded View" (VQ35HR) or EM-177, "Exploded View" (VK50VE).
2. Disconnect ambient sensor connector (A), and then remove ambient sensor (1).

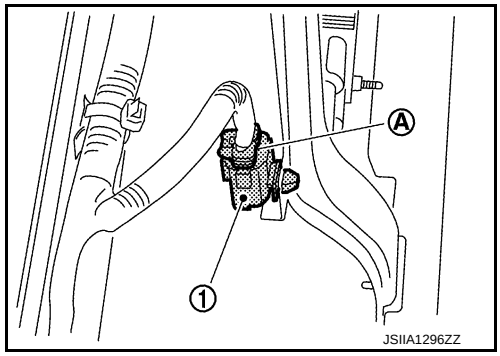

INSTALLATION

Installation is basically the reverse order of removal.

IN-VEHICLE SENSOR

Exploded View

INFOID:0000000003941598

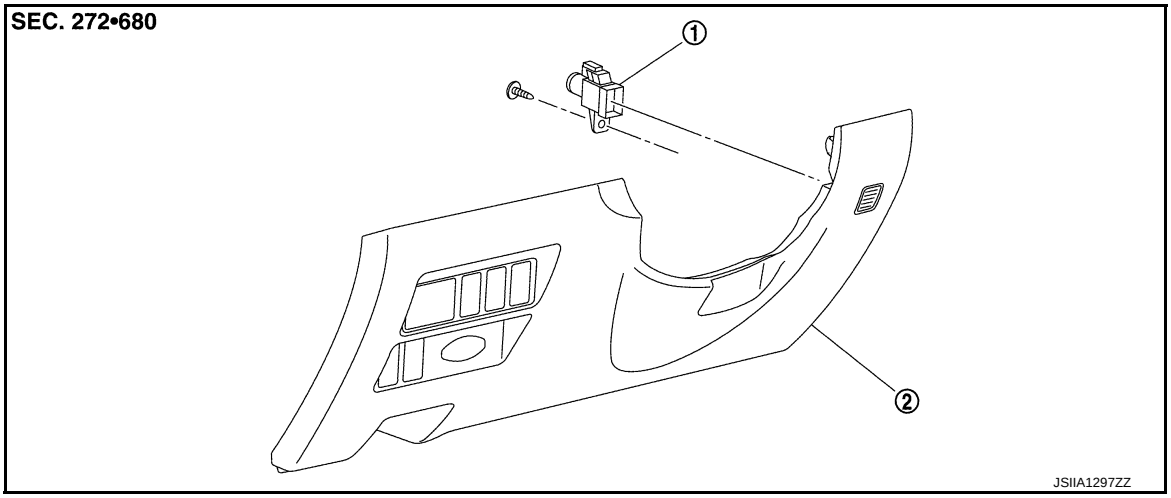

1. In-vehicle sensor
2. Instrument lower panel LH

Removal and Installation

INFOID:0000000003941599

REMOVAL

1. Remove instrument lower panel LH. Refer to IP-11, "Exploded View".
2. Remove mounting screw (A), and then remove in-vehicle sensor (1).

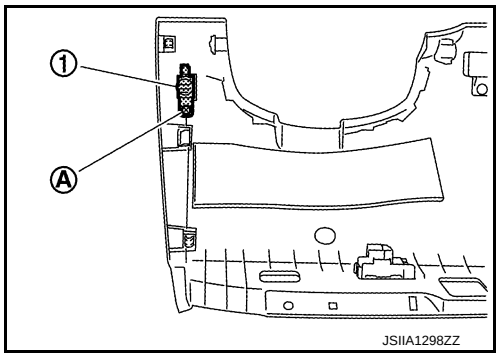

INSTALLATION

Installation is basically the reverse order of removal.

SUNLOAD SENSOR

Exploded View

INFOID:0000000003941600

1. Front defroster grille LH
2. Sunload sensor

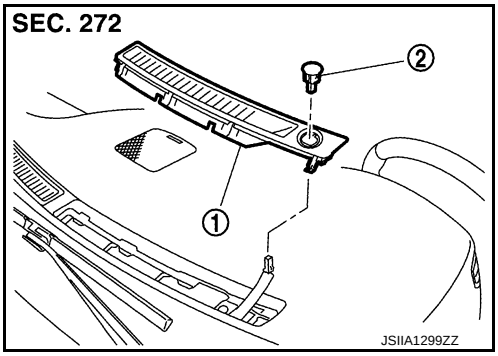

Removal and Installation

INFOID:0000000003941601

REMOVAL

1. Remove front defroster grille LH (1). Refer to VTL-11, "Exploded View".
2. Disconnect sunload sensor connector, and then remove sunload sensor (2).

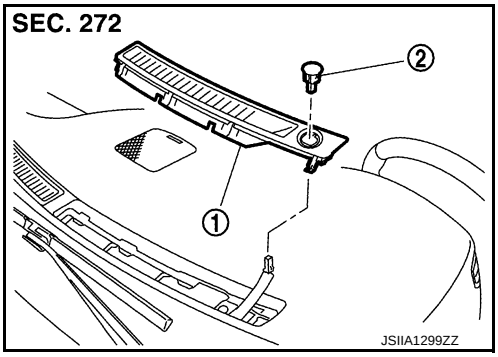

INSTALLATION

Installation is basically the reverse order of removal.

INTAKE SENSOR

Exploded View

INFOID:0000000003941602

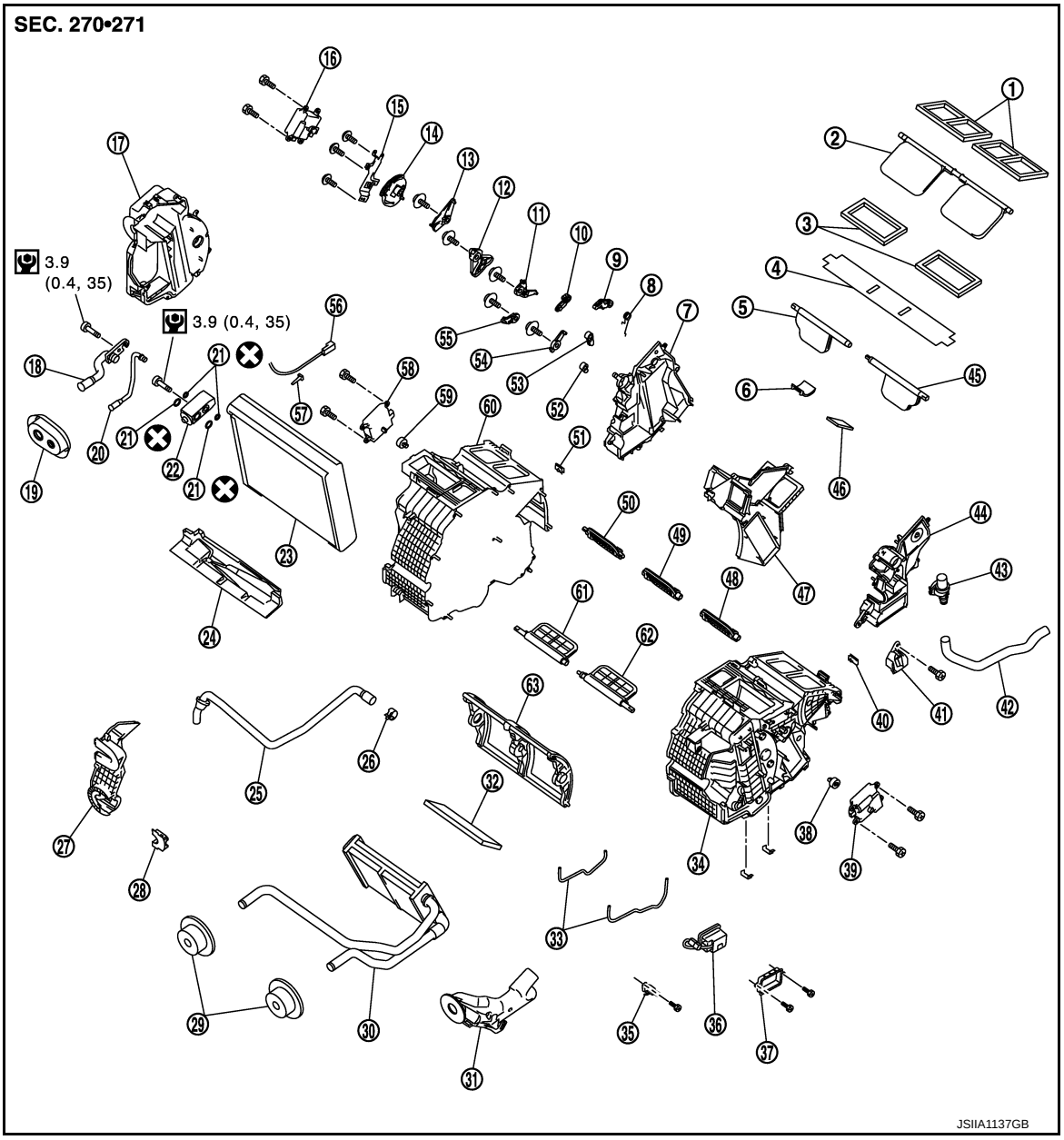

1.	Ventilator seal	2.	Ventilator door	3.	Defroster seal
4.	Packing	5.	Defroster door (right)	6.	Packing
7.	Foot duct (right)	8.	Ventilator door spring	9.	Ventilator door lever
10.	Foot door lever	11.	Foot door link	12.	Main link sub
13.	Ventilator door link	14.	Main link	15.	Mode door motor bracket
16.	Mode door motor	17.	Evaporator cover	18.	Low-pressure pipe 1
19.	Cooler pipe grommet	20.	High-pressure pipe 2	21.	O-ring
22.	Expansion valve	23.	Evaporator	24.	Insulator
25.	Drain hose	26.	Clamp	27.	Evaporator cover adapter
28.	Heater pipe bracket	29.	Heater pipe grommet	30.	Heater core
31.	Heater pipe cover	32.	Packing	33.	Case packing
34.	Heater & cooling unit case (left)	35.	Ionizer harness bracket*	36.	Ionizer*

37. Ionizer bracket*	38. Air mix door adapter	39. Air mix door motor (driver side)
40. J-nut	41. Front heater duct	42. Aspirator hose
43. Aspirator	44. Foot duct (left)	45. Defroster door (left)
46. Packing	47. Center case	48. Foot door (left)
49. Rear ventilator door	50. Foot door (right)	51. J-nut
52. Max. cool door lever	53. Defroster door lever	54. Defroster door link
55. Max. cool door link	56. Intake sensor	57. Intake sensor bracket
58. Air mix door motor (passenger side)	59. Air mix door adapter	60. Heater & cooling unit case (right)
61. Max. cool door (right)	62. Max. cool door (left)	63. Air mix door (Slide door)

*With advanced climate control system (ACCS).

Refer to GI-4, "Components" for symbols in the figure.

Removal and Installation

INFOID:0000000003941603

REMOVAL

1. Remove low-pressure pipe 1 and high-pressure pipe 2. Refer to HA-40, "Exploded View" (VQ35HR) or HA-96, "Exploded View" (VK50VE).
2. Slide evaporator (1) to passenger side, and then remove intake sensor (2).
3. Disconnect intake sensor connector.

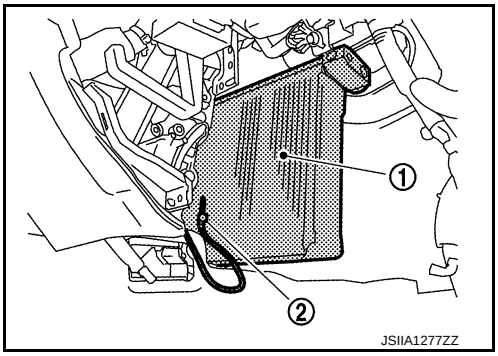

INSTALLATION

Installation is basically the reverse order of removal.

CAUTION:

- **Replace O-rings with new ones. Then apply compressor oil to them when installing.**
- **Mark the mounting position of intake sensor bracket prior to removal so that the reinstalled sensor can be located in the same position.**
- **Female-side piping connection is thin and easy to deform. Slowly insert the male-side piping straight in axial direction.**
- **Insert piping securely until a click is heard.**
- **After piping connection is completed, pull male-side piping by hand to make sure that connection does not come loose.**
- **Check for leakages when recharging refrigerant.**

GAS SENSOR

Exploded View

INFOID:0000000003941604

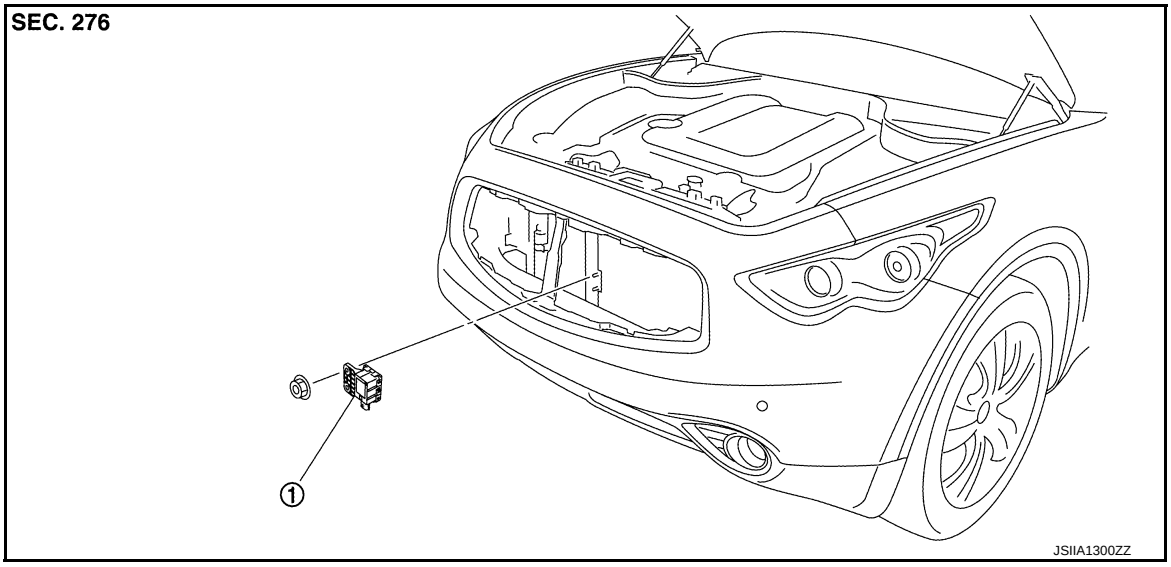

1. Gas sensor

Removal and Installation

INFOID:0000000003941605

REMOVAL

1. Remove air duct (inlet). Refer to EM-177, "Exploded View".
2. Remove mounting nuts (A), and then remove gas sensor (1).
3. Disconnect gas sensor connector (B).

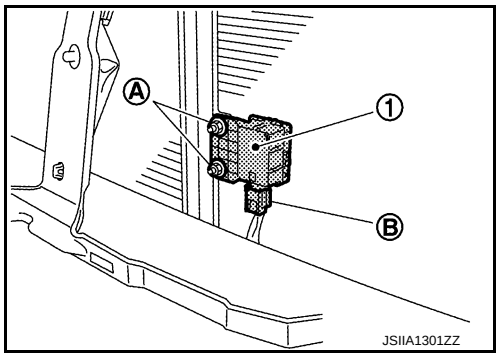

INSTALLATION

Installation is basically the reverse order of removal.

REFRIGERANT PRESSURE SENSOR

Exploded View

INFOID:0000000004067506

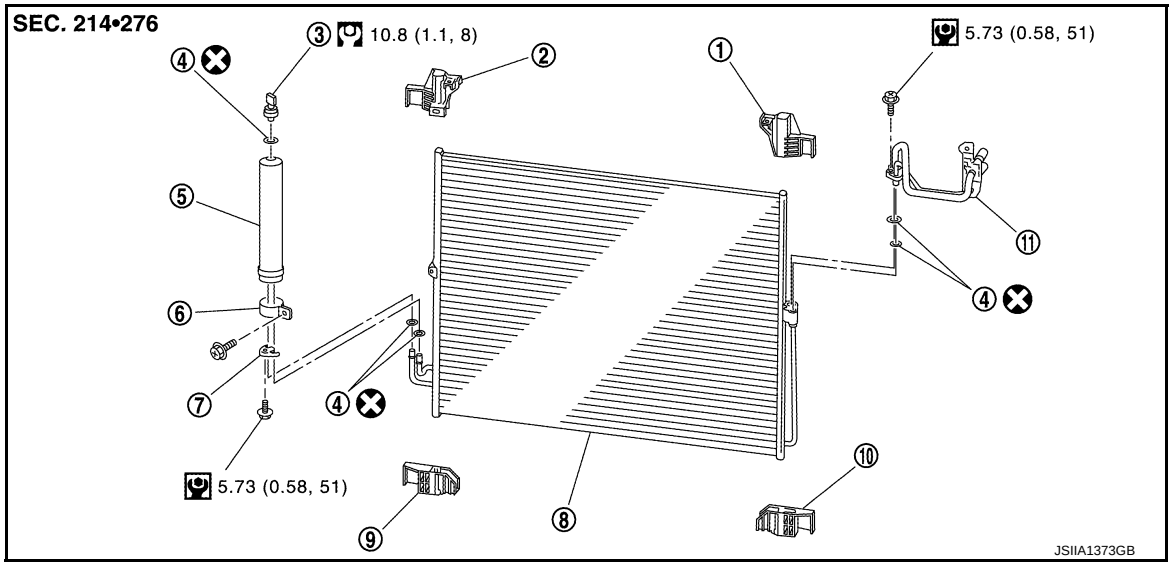

1. Condenser upper bracket (left)
2. Condenser upper bracket (right)
3. Refrigerant pressure sensor
4. O-ring
5. Liquid tank
6. Liquid tank bracket
7. Bracket
8. Condenser
9. Condenser lower bracket (right)
10. Condenser lower bracket (left)
11. Condenser pipe assembly

Refer to GI-4, "Components" for symbols in the figure.

Removal and Installation

INFOID:0000000004067507

REMOVAL

1. Remove liquid tank. Refer to HAC-186, "Exploded View".
2. Fix the liquid tank (1) with a vise (A). Remove the refrigerant pressure sensor (2) with a wrench (B).
   CAUTION:
   Be careful not to damage liquid tank.

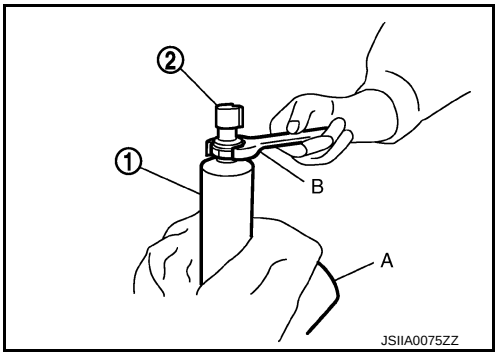

INSTALLATION

Installation is basically the reverse order of removal.

CAUTION:

- **Replace O-ring with new one. Then apply compressor oil to them when installing.**
- **Check for leakages when recharging refrigerant.**

DOOR MOTOR

Exploded View

INFOID:0000000003941614

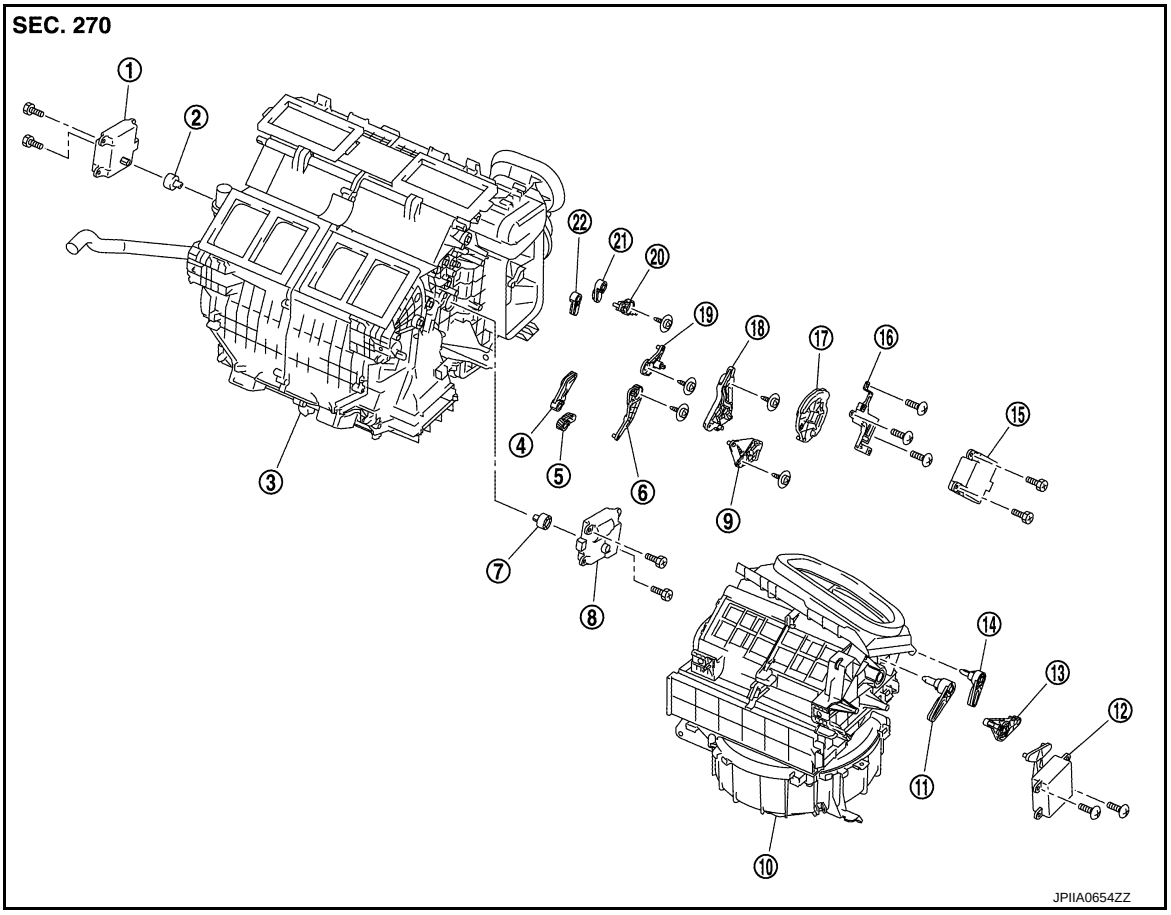

1. Air mix door motor (driver side)	2. Air mix door motor adapter	3. Heater & cooling unit assembly
4. Ventilator door lever	5. Foot door lever	6. Foot door link
7. Air mix door motor adapter	8. Air mix door motor (passenger side)	9. Ventilator door link
10. Blower unit	11. Intake door lever 2	12. Intake door motor
13. Intake door link	14. Intake door lever 1	15. Mode door motor
16. Mode door motor bracket	17. Main link	18. Main link sub
19. Max.cool door link	20. Defroster door link	21. Max.cool door lever
22. Defroster door lever		

MODE DOOR MOTOR

MODE DOOR MOTOR : Removal and Installation

INFOID:0000000003941615

REMOVAL

1. Remove blower unit. Refer to HA-57, "Exploded View" (VQ35HR) or HA-114, "Exploded View" (VK50VE).

2. Remove mounting screws (A), and then remove mode door motor (1).
3. Disconnect mode door motor connector.

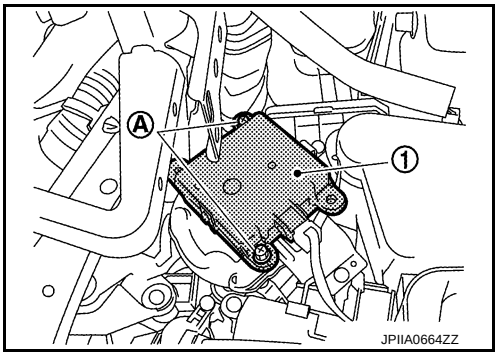

INSTALLATION

installation is basically the reverse order of removal.

AIR MIX DOOR MOTOR

AIR MIX DOOR MOTOR : Removal and Installation

INFOID:0000000003941650

REMOVAL

Driver Side

1. Set the temperature (driver side) at 18.0°C (60°F).
2. Disconnect the battery cable from the negative terminal.
3. Remove instrument lower panel LH. Refer to IP-11, "Exploded View".
4. Remove automatic drive positioner control unit. Refer to ADP-208, "Exploded View".
5. Remove mounting screws (A), and then remove air mix door motor (driver side) (1).
6. Disconnect air mix door motor connector.

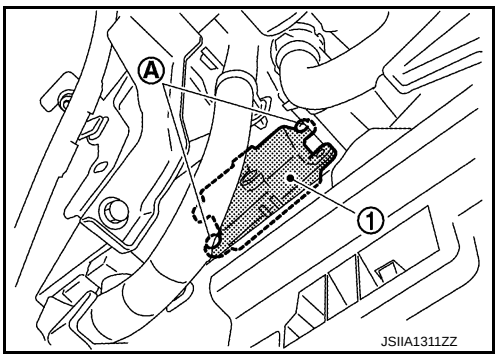

Passenger Side

1. Set the temperature (passenger side) at 18°C (60°F).
2. Disconnect the battery cable from the negative terminal.
3. Remove blower unit. Refer to HA-57, "Exploded View" (VQ35HR) or HA-114, "Exploded View" (VK50VE).
4. Remove mounting screws (A), and then remove air mix door motor (passenger side) (1).
5. Disconnect air mix door motor connector.

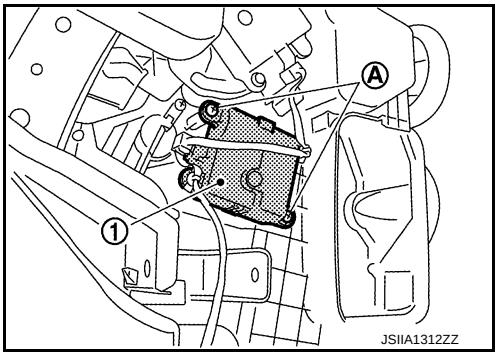

INSTALLATION

Installation is basically the reverse order of removal.

INTAKE DOOR MOTOR

INTAKE DOOR MOTOR : Removal and Installation

INFOID:0000000003941651

REMOVAL

1. Remove ECM and power steering control unit with bracket attached. Refer to HA-57, "BLOWER UNIT : Removal and Installation" (VQ35HR) or HA-114, "BLOWER UNIT : Removal and Installation" (VK50VE).
2. Remove mounting screws (A), and then remove intake door motor (1) from blower unit.
3. Disconnect intake door motor connector.

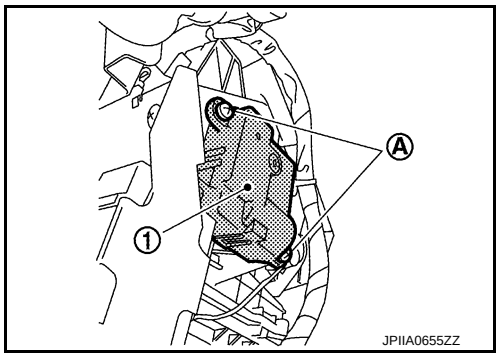

INSTALLATION

Installation is basically the reverse order of removal.

IONIZER

Exploded View

INFOID:0000000003941637

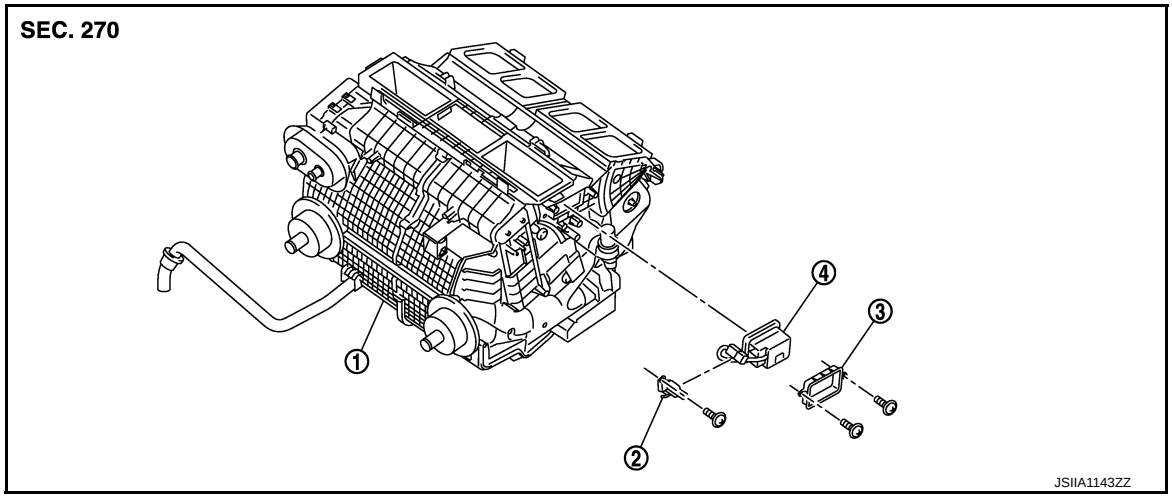

1. Heater & cooling unit assembly
2. Ionizer harness bracket
3. Ionizer bracket
4. Ionizer

Removal and Installation

INFOID:0000000003941638

REMOVAL

1. Remove instrument lower panel LH. Refer to HA-57, "Exploded View".
2. Remove mounting screw (A), and then remove ionizer harness bracket (1) from heater & cooling unit assembly.

   ⇦: Vehicle front

3. Remove mounting screws (B), and then remove ionizer (2).
   CAUTION:
   Never touch the surface (ceramic part) of ionizer. It is the discharge electrode.

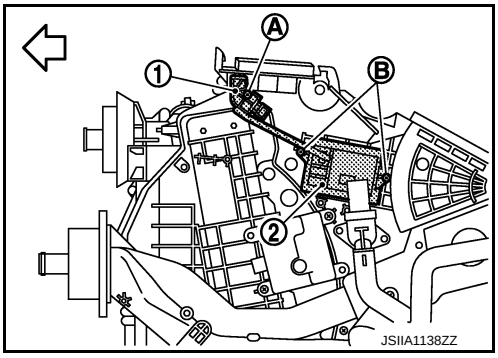

INSTALLATION

installation is basically the reverse order of removal.

CAUTION:

If there is dirt, use a clean cloth and clean the discharge electrode (ceramic part) of ionizer.